REAL ENTERPRISE

Mfg. : Chain Sprocket, Chain Coupling, Coupling
Helical Gear, Spur Gear & Heavy Machinery Spare Parts
Importer of : HRJC Roller Chain.
Stockist of : Diamond Roller Chain.

TRANSMISSION SPROCKET

CHAIN COUPLING

GEAR COUPLING

HRJC ROLLER CHAIN

Call : 079-22749300 www.real-enterprise.in

GEAR COUPLINGS

Full Gear Coupling &
Half Gear Coupling 101
To 117, 118 & 119 As Per
Customer Requirement

TRANSMISSION CHAIN SPROCKET
RANGE:
From 0.375" Pitch To 3".0 pitch for simplex,
Duplex & Triplex Roller Chains Sprocket in material
of M. S., C. I., EN, Forged Steel & Cast Steel,
S. S. materials.

SPROCKET ASSEMBLY
Including Shaft, Sprocket, Key,
Coller, Plummer Block etc.

PLUMMER BLOCKS
RANGE:
In SN, SNA Series & also
as per Customers Specifications
(in C. I., C. S.) with G. M. Liners

TRANSMISSION CHAIN
RANGE:
From 0.375" Pitch to 3.0" Pitch
for Simplex Duplex &
Triplex Roller Chain
(TI DIAMOND CHAIN LTD
& IMPORTED ROLLER CHAIN)

COMPANY PROFILE

Ours is the self oriented organization being set in the year 2005 to manufacture & supply the precision engineering products to all major & light industries as mechanical power transmission items.

Earlier our manufacturing unit was at our domicile near Ahmedabad in the name and style **Real Enterprise** now it is prime location at Ahmedabad, in rakhial industrial zone with erecting latest machinery to maintain best quality and decent workmanship with the help of available our techno craft in order to increase more involvement of our techno craft in marketing precision parts across the country. We are manufacture and supply the product being suitable for industries like,

STEEL, SUGAR, CEMENT, FERTILIZER, POWER, TEXTILE, CHEMICAL, PLASTIC ETC.

We are with the wide range of products for all industries like,Transmission Roller Sprocket, Conveyor Sprockets, Gear Couplings (Full/Half), Gear Pinion, Etc.

We also sell Imported Transmission Roller Chain (HRJC) in our sister concern firm **M/s. Hetal Industries** under same roof.

Nowadays, reliable and trustworthy industrial suppliers for all kind of products have become more important in the world of just in time production and flexible markets.

Therefore we expect to have your hands with us in our dynamic endeavor to have success of meeting customers' satisfaction goal.

YOURS TRULY
Parin Shah

REAL ENTERPRISE

Reg. Off. & Works :
9, Patel Estate, Opp. Satnam Estate,
Nagarvel Hanuman Road, Rakhial,
Ahmedabad - 380 023. Gujarat (INDIA)

Tele Fax : 079-22749300
Mobile : +91 93270 09351, +91 7779092774
E-mail : realenterprise.in@gmail.com
Web : www.real-enterprise.in

OUR PRODUCTS

1. TRANSMISSION ROLLER CHAIN SPROCKET & CHAIN COUPLING

Range:-0.375” pitch to 3” Pitch in Simplex Duplex Triplex or any multiple Strand. As per standards DIN 8187 & DIAN 8188, BS228, ISO 606, ANSI B29.1.
Material:-M.S., C.I., EN Series, Forged Steel, Cast Steel, S.S.Material also.

2. CONVEYOR SPROCKET

Range:-3”Pitch To 12”Pitch for all type of carriers as per our drawing, Or customer’s drawing or samples.
Material:-M.S., C.I., EN Series, Forged Steel, Cast Steel, S.S.Material also.

3. GEAR COUPLINGS (FULL/HALF OR RIGID)

Range: - Full Gear Coupling RFG-100 to RSFG-119 as per our catalogue or made as per customers requirement against their drawings.
Half Gear Coupling RHG-100 to RFG-110 as per our catalogue or made as per customers requirement against their drawings.
Related to coupling we also make rigid coupling, break drum couplings etc.

4. GEAR & PINION

(Spur Gear, Heliacal Gear, Ring Gear, Worm & Worm Wheel) Range:-up to 30Module & 0.75”D.P. F.W. up 600mm in all material. & 1 Dp to 16 Dp Related to gear & pinion we are also making worm wheel & worm shaft for reduction gear box as per drawing.

5. TRANSMISSION ROLLER CHAIN

Range: - 0.375” pitch to 3” Pitch in Simplex, Duplex, Triplex or any multiple Strand. As per standards DIN 8187 & DIAN 8188, BS228, ISO 606, ANSI B29.1.DIAMOND brand industrial roller chains.

6. V-PULLEY

Range: - For the section a, b, c, d, e, in single to any multiple groove up O.D.96” Plain or with taper lock bush. As per standards as per drawings.

7. PLUMBER BLOCKS AND BEARING HOUSING

Range: - In SN SNA series specially making as per customers order or as per drawings. Also making bearing housing locating or non locating specially for steel industries.
Material:- C.I., Cast Steel, With G.M. Liners or any Bearing Size.

8. CHAIN PULLEY BLOCK

Range: -0.5 Ton Capacity to 20 Ton Cap pulley blocks, wire rope hoist, portable jib crain. ele.trolly & elevator trucks.We are also authorized dealer of ‘MORRIS’ brand chain pulley blocks.

Thanks,
Hope we will get good business with you as your esteem vendor list.

Quality Control

Our prime motto is to develop premium quality range for valued customers and attain their utmost satisfaction. For this, we have hired a team of highly qualified and skilled professionals, who keep a strict surveillance on the entire production process. They monitor each stage of sourcing to final dispatch of the consignments. Our raw material is procured from the certified vendors of the market to ensure the premium grade finished product.

Our quality experts conduct rigorous test on the products in our well built quality testing laboratory. The unit is equipped with latest testing equipment ensuring proper functioning of our range. Our range is tested on the basis of the following parameters :

- Durability
- Performance
- Operational Accuracy

LIST OF MACHINERY TOOLS/EQUIPMENTS

NO.	DESCRIPTION	CAPACITY	MAKE	QTY
1	Gear Shaper M/c. (In side Teeth Cutter)	Up to 8 Module	T.O.S	03 Nos
2	Gear Shaper M/c.Out Side Teeth Cutter)	Up to 12 Module	T.O.S	03 Nos
3	Lathe Machine	10” Center	HMT	02 Nos
4	Lathe Machine	12” Center	Honest	04 Nos
5	Lathe With Drilling M/c.	16” Center	Shakti	01 Nos
6	Milling M/c.	3/8"Pitch to 3" Pitch	Somanath	05 Nos
7	Hobbing M/c.	Up to 25 Module		01 Nos
8	CNC Turning LEAD WELL	900 x 750	TOS	01 Nos
9	Hobbing M/c.	Up to 12 Module 800mm	Jay Somnath	05 Nos
10	VMC	750X550X550	HASS	01 Nos
11	VMC	2000X1000X1000	BFW	01 Nos
12	CNC MACHINE	DX 200	JYOTI	02 Nos
13	VTM for Drilling	Fully auto 1000X750X750	HMT	01 Nos
14	Slotting M/c.	up to finish job		
15	Lathe Machine for Pulley Making	Up to 1400mm O.D.	TOS	01 Nos

Our range is widely acclaimed in the market for its remarkable features like :

- Durable
- Optimum Quality
- Excellent Performance
- Low Maintenance
- Corrosion Resistance

Industries We Cater

Our products are manufactured using high grade material and in close tandem to industry set standards and guidelines. Thus, these are widely used in diverse industrial segments, such as :

- Steel Industry
- Sugar Industry
- Cement Industry
- Fertilizer Industry
- Textile Industry
- Chemical Industry

SPROCKET
3/8" X 7/32"

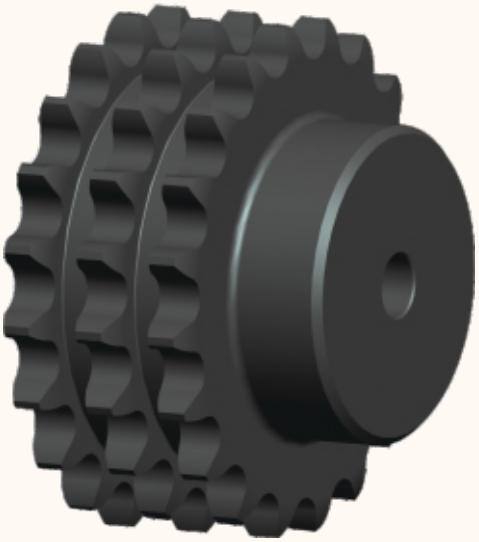

TEETH	O.D	P.C.D	ROOT DIA	SIMPLEX		
				BOSS DIA	TOTAL LENGTH	TOOTH THICKNESS
8	28	24.89	18.54	15	24	5.1
9	31	27.85	21.5	18	24	5.1
10	34	30.82	24.47	20	24	5.1
11	37	33.8	27.45	22	24	5.1
12	40	36.8	30.45	25	24	5.1
13	43	39.8	33.44	28	24	5.1
14	46.3	42.8	36.45	31	24	5.1
15	49.3	45.81	39.46	34	24	5.1
16	52.3	48.82	42.47	37	24	5.1
17	55.3	51.83	45.48	40	24	5.1
18	58.3	54.85	48.5	43	24	5.1
19	61.3	57.87	51.52	45	24	5.1
20	64.3	60.88	54.54	46	24	5.1
21	68	63.90	57.56	48	24	5.1
22	71	66.93	60.58	50	24	5.1
23	73.5	69.95	63.6	52	24	5.1
24	77	72.97	66.62	54	24	5.1
25	80	76	69.65	57	24	5.1
26	83	79.02	72.67	66	24	5.1
27	86	82.05	75.7	69	24	5.1
28	89	85.07	78.72	72	24	5.1
29	92	88.09	81.74	75	24	5.1
30	94.7	91.12	84.77	78	24	5.1
31	98.3	94.15	87.8	81	24	5.1
32	101.3	97.17	90.82	84	24	5.1
33	104.3	100.2	93.85	87	24	5.1
34	107.3	103.23	96.88	90	24	5.1
35	110.4	106.26	99.91	93	24	5.1
36	113.4	109.29	102.94	96	24	5.1
37	116.4	112.32	105.97	99	24	5.1
38	119.5	115.35	109	102	24	5.1
39	122.5	118.37	112.02	*70	30	5.1
40	125.5	121.4	115.05	*70	30	5.1
41	128.5	124.43	118.08	*70	30	5.1
42	131.6	127.46	121.11	*70	30	5.1
43	134.6	130.49	124.14	*70	30	5.1
44	137.6	133.52	127.17	*70	30	5.1
45	140.7	136.55	130.2	*70	30	5.1
46	143.7	139.58	133.23	*70	30	5.1
47	146.7	142.61	136.26	*70	30	5.1
48	149.7	145.64	139.29	*70	30	5.1
49	152.7	148.66	142.31	*75	30	5.1
50	155.7	151.69	145.34	*75	30	5.1
51	158.7	154.72	148.37	*75	30	5.1
52	161.8	157.75	151.4	*75	30	5.1
53	164.8	160.78	154.43	*75	30	5.1
54	167.8	163.82	157.47	*75	30	5.1
55	170.8	166.85	160.5	*75	30	5.1
56	173.8	169.88	163.53	*75	30	5.1
57	176.9	172.91	166.56	*75	30	5.1
58	179.9	175.93	169.58	*75	30	5.1
59	183	178.96	172.61	*75	30	5.1
60	186	181.99	175.64	*80	30	5.1
62	192.1	188.06	181.71	*80	30	5.1
64	198.2	194.12	187.77	*80	30	5.1
65	201.6	197.15	190.8	*80	30	5.1
66	204.6	200.18	193.83	*85	30	5.1
68	210.7	206.24	199.89	*85	30	5.1
70	216.7	212.3	205.95	*85	30	5.1
72	222.8	218.37	212.02	*85	30	5.1
75	231.9	227.46	221.11	*85	30	5.1
76	234.9	230.49	224.14	*85	30	5.1
78	241	236.55	230.2	*85	30	5.1
80	247.1	242.61	236.26	*85	30	5.1
85	262.2	257.77	251.42	*85	30	5.1
90	277.4	272.93	266.58	*85	30	5.1
95	292.5	288.08	281.73	*85	30	5.1
100	307.7	303.25	296.9	*85	30	5.1
110	338	333.55	327.2	*85	30	5.1
114	349.5	345.68	339.33	*85	30	5.1
120	368.3	363.86	357.51	*85	30	5.1
125	383.5	379.02	372.67	*85	30	5.1

DUPLEX			
BOSS DIA	TOTAL LENGTH	TOOTH THICKNESS	TOOTH
15	34	15	5
18	34	15	5
20	34	15	5
22	34	15	5
25	34	15	5
28	34	15	5
31	34	15	5
34	34	15	5
37	34	15	5
40	34	15	5
43	34	15	5
45	34	15	5
46	34	15	5
48	34	15	5
50	34	15	5
52	34	15	5
54	34	15	5
57	34	15	5
66	34	15	5
69	34	15	5
72	34	15	5
75	34	15	5
78	34	15	5
81	34	15	5
84	34	15	5
87	34	15	5
90	34	15	5
93	34	15	5
96	34	15	5
99	34	15	5
102	34	15	5
*70	40	15	5
*70	40	15	5
*70	40	15	5
*70	40	15	5
*70	40	15	5
*70	40	15	5
*70	40	15	5
*70	40	15	5
*70	40	15	5
*70	40	15	5
*75	40	15	5
*75	40	15	5
*75	40	15	5
*75	40	15	5
*75	40	15	5
*75	40	15	5
*75	40	15	5
*75	40	15	5
*75	40	15	5
*75	40	15	5
*75	40	15	5
*75	40	15	5
*75	40	15	5
*80	40	15	5
*80	40	15	5
*80	40	15	5
*80	40	15	5
*85	40	15	5
*85	40	15	5
*85	40	15	5
*85	40	15	5
*85	40	15	5
*85	40	15	5
*85	40	15	5
*85	40	15	5
*85	40	15	5
*85	40	15	5
*85	40	15	5
*85	40	15	5
*85	40	15	5
*85	40	15	5
*85	40	15	5
*85	40	15	5

TRIPLEX			
BOSS DIA	TOTAL LENGTH	TOOTH THICKNESS	TOOTH
15	44	25	5
18	44	25	5
20	44	25	5
22	44	25	5
25	44	25	5
28	44	25	5
31	44	25	5
34	44	25	5
37	44	25	5
40	44	25	5
43	44	25	5
45	44	25	5
46	44	25	5
48	44	25	5
50	44	25	5
52	44	25	5
54	44	25	5
57	44	25	5
66	44	25	5
69	44	25	5
72	44	25	5
75	44	25	5
78	44	25	5
81	44	25	5
84	44	25	5
87	44	25	5
90	44	25	5
93	44	25	5
96	44	25	5
99	44	25	5
102	44	25	5
*70	48	25	5
*70	48	25	5
*70	48	25	5
*70	48	25	5
*70	48	25	5
*70	48	25	5
*70	48	25	5
*70	48	25	5
*70	48	25	5
*70	48	25	5
*75	48	25	5
*75	48	25	5
*75	48	25	5
*75	48	25	5
*75	48	25	5
*75	48	25	5
*75	48	25	5
*75	48	25	5
*75	48	25	5
*75	48	25	5
*75	48	25	5
*75	48	25	5
*75	48	25	5
*80	48	25	5
*80	48	25	5
*80	48	25	5
*80	48	25	5
*85	48	25	5
*85	48	25	5
*85	48	25	5
*85	48	25	5
*85	48	25	5
*85	48	25	5
*85	48	25	5
*85	48	25	5
*85	48	25	5
*85	48	25	5
*85	48	25	5
*85	48	25	5
*85	48	25	5
*85	48	25	5
*85	48	25	5
*85	48	25	5

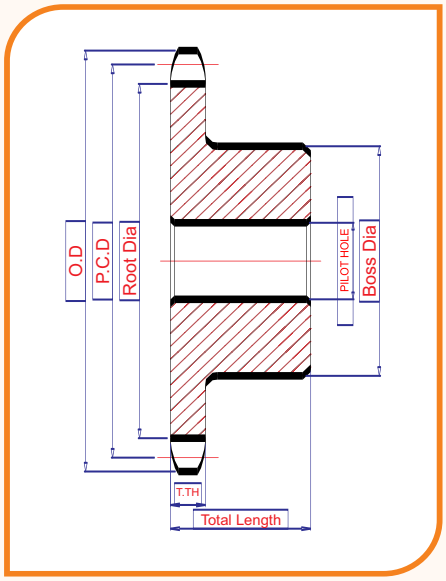

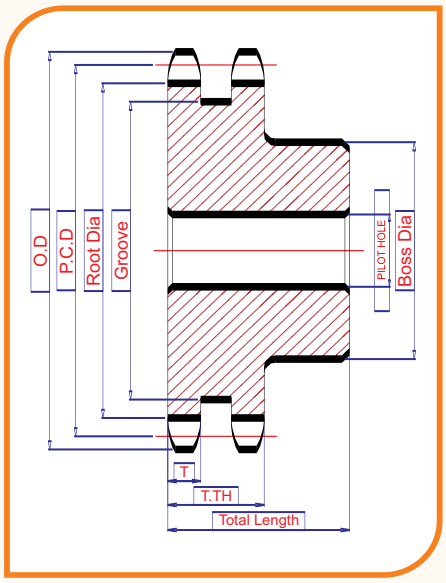

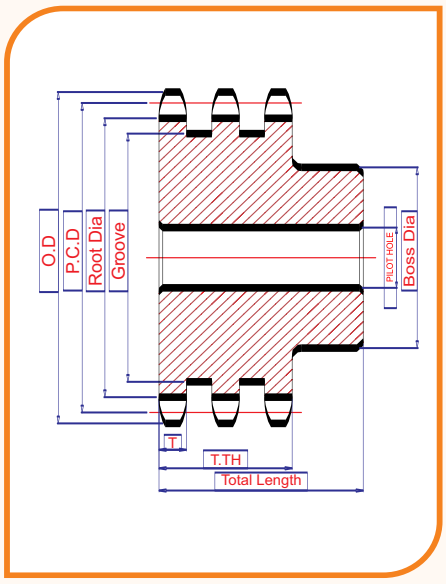

SPROCKET
1/2" X 5/16"

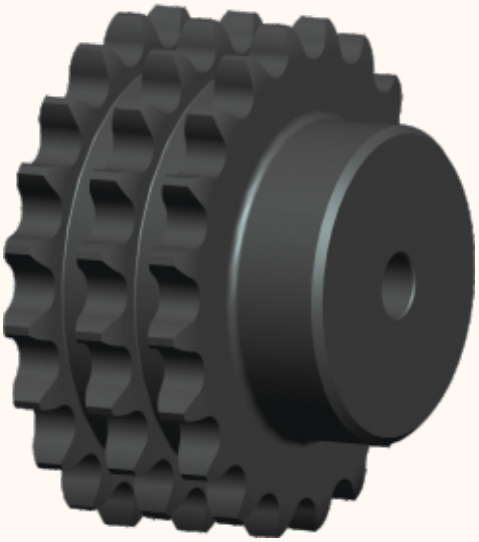

TEETH	O.D	P.C.D	ROOT DIA	SIMPLEX		
				BOSS DIA	TOTAL LENGTH	TOOTH THICKNESS
8	37.2	33.18	24.67	20	24	7.1
9	41	37.13	28.62	24	24	7.1
10	45.2	41.1	32.59	26	24	7.1
11	48.7	45.07	36.56	29	24	7.1
12	53	49.07	40.56	34	24	7.1
13	57.4	53.06	44.55	38	24	7.1
14	64.8	57.07	48.56	42	24	7.1
15	65.5	61.09	52.58	46	24	7.1
16	69.5	65.1	56.59	50	24	7.1
17	73.6	69.11	60.6	54	24	7.1
18	77.8	73.14	64.63	58	24	7.1
19	81.7	77.16	68.65	62	24	7.1
20	85.8	81.19	72.68	66	24	7.1
21	89.7	85.22	76.71	70	24	7.1
22	93.8	89.24	80.73	74	24	7.1
23	98.2	93.27	84.76	78	24	7.1
24	101.8	97.29	88.78	82	24	7.1
25	105.8	101.33	92.82	86	24	7.1
26	110	105.36	96.85	90	24	7.1
27	114	109.4	100.89	94	24	7.1
28	118	113.42	104.91	96	24	7.1
29	122	117.46	108.95	*70	32	7.1
30	129.1	121.5	112.99	*70	32	7.1
31	130.2	125.54	117.03	*70	32	7.1
32	134.3	129.56	121.05	*70	32	7.1
33	138.4	133.6	125.09	*70	32	7.1
34	142.6	137.64	129.13	*70	32	7.1
35	146.7	141.68	133.17	*70	32	7.1
36	151	145.72	137.21	*75	32	7.1
37	154.06	149.76	141.25	*75	32	7.1
38	158.6	153.8	145.29	*75	32	7.1
39	162.7	157.83	149.32	*75	32	7.1
40	166.8	161.87	153.36	*75	32	7.1
41	171.4	165.91	157.4	*80	32	7.1
42	175.4	169.94	161.43	*80	32	7.1
43	179.7	173.98	165.47	*80	32	7.1
44	183.8	178.02	169.51	*80	32	7.1
45	188	182.07	173.56	*80	32	7.1
46	192.1	186.1	177.59	*80	32	7.1
47	196.2	190.14	181.63	*85	32	7.1
48	200.3	194.18	185.67	*85	32	7.1
49	204.3	198.22	189.71	*85	32	7.1
50	208.3	202.26	193.75	*85	32	7.1
51	212.1	206.3	197.79	*85	32	7.1
52	216.1	210 .34	201.83	*85	32	7.1
53	220.2	214.37	205.86	*85	32	7.1
54	224.1	218.43	209.92	*85	32	7.1
55	228.1	222.46	213.95	*85	32	7.1
56	232.2	226.5	217.99	*90	32	7.1
57	236.4	230.54	222.03	*90	32	7.1
58	240.5	234.58	226.07	*90	32	7.1
59	244.5	238.62	230.11	*90	32	7.1
60	248.5	242.66	234.15	*90	32	7.1
62	256.9	250.74	242.23	*90	32	7.1
64	265.1	258.82	250.31	*90	32	7.1
65	269	262.86	254.35	*90	32	7.1
66	273	266.91	258.4	*90	32	7.1
68	281	274.99	266.48	*90	32	7.1
70	289	283.07	274.56	*90	32	7.1
72	297.2	291.15	282.64	*90	32	7.1
75	309.2	303.28	294.77	*90	32	7.1
76	313.3	307.32	298.81	*90	32	7.1
78	321.4	315.4	306.89	*90	32	7.1
80	329.4	323.49	314.98	*90	32	7.1
85	349	343.69	335.18	*90	32	7.1
90	369.9	363.9	355.39	*90	32	7.1
95	390.1	384.11	375.6	*90	32	7.1
100	410.3	404.32	395.81	*90	32	7.1
110	450.7	444.74	436.23	*90	32	7.1
114	349.5	345.68	339.33	*90	32	7.1
120	368.3	363.86	357.51	*90	32	7.1
125	383.5	379.02	372.67	*90	32	7.1

DUPLEX

BOSS DIA	TOTAL LENGTH	TOOTH THICKNESS	TOOTH
20	38	21	7
24	38	21	7
26	38	21	7
29	38	21	7
34	38	21	7
38	38	21	7
42	38	21	7
46	38	21	7
50	39	21	7
54	39	21	7
58	39	21	7
62	39	21	7
66	39	21	7
70	39	21	7
74	39	21	7
78	39	21	7
82	39	21	7
86	39	21	7
90	39	21	7
94	39	21	7
96	39	21	7
*70	46	21	7
*70	46	21	7
*70	46	21	7
*70	46	21	7
*70	46	21	7
*70	46	21	7
*70	46	21	7
*75	46	21	7
*75	46	21	7
*75	46	21	7
*75	46	21	7
*75	46	21	7
*80	46	21	7
*80	46	21	7
*80	46	21	7
*80	46	21	7
*80	46	21	7
*80	46	21	7
*85	46	21	7
*85	46	21	7
*85	46	21	7
*85	46	21	7
*85	46	21	7
*85	46	21	7
*85	46	21	7
*85	46	21	7
*85	46	21	7
*90	46	21	7
*90	46	21	7
*90	46	21	7
*90	46	21	7
*90	46	21	7
*90	46	21	7
*90	46	21	7
*90	46	21	7
*90	46	21	7
*90	46	21	7
*90	46	21	7
*90	46	21	7
*90	46	21	7
*90	46	21	7
*90	46	21	7
*90	46	21	7
*90	46	21	7
*90	46	21	7
*90	46	21	7
*90	46	21	7
*90	46	21	7
*90	46	21	7
*90	46	21	7
*90	46	21	7

TRIPLEX

BOSS DIA	TOTAL LENGTH	TOOTH THICKNESS	TOOTH
20	53	34.9	7
24	53	34.9	7
26	53	34.9	7
29	53	34.9	7
34	53	34.9	7
38	53	34.9	7
42	53	34.9	7
46	53	34.9	7
50	53	34.9	7
54	53	34.9	7
58	53	34.9	7
62	53	34.9	7
66	53	34.9	7
70	53	34.9	7
74	53	34.9	7
78	53	34.9	7
82	53	34.9	7
86	53	34.9	7
90	53	34.9	7
94	53	34.9	7
96	53	34.9	7
*70	58	34.9	7
*70	58	34.9	7
*70	58	34.9	7
*70	58	34.9	7
*70	58	34.9	7
*70	58	34.9	7
*70	58	34.9	7
*75	58	34.9	7
*75	58	34.9	7
*75	58	34.9	7
*75	58	34.9	7
*75	58	34.9	7
*80	58	34.9	7
*80	58	34.9	7
*80	58	34.9	7
*80	58	34.9	7
*80	58	34.9	7
*80	58	34.9	7
*85	58	34.9	7
*85	58	34.9	7
*85	58	34.9	7
*85	58	34.9	7
*85	58	34.9	7
*85	58	34.9	7
*85	58	34.9	7
*85	58	34.9	7
*85	58	34.9	7
*90	58	34.9	7
*90	58	34.9	7
*90	58	34.9	7
*90	58	34.9	7
*90	58	34.9	7
*90	58	34.9	7
*90	58	34.9	7
*90	58	34.9	7
*90	58	34.9	7
*90	58	34.9	7
*90	58	34.9	7
*90	58	34.9	7
*90	58	34.9	7
*90	58	34.9	7
*90	58	34.9	7
*90	58	34.9	7
*90	58	34.9	7
*90	58	34.9	7
*90	58	34.9	7
*90	58	34.9	7
*90	58	34.9	7
*90	58	34.9	7
*90	58	34.9	7
*90	58	34.9	7

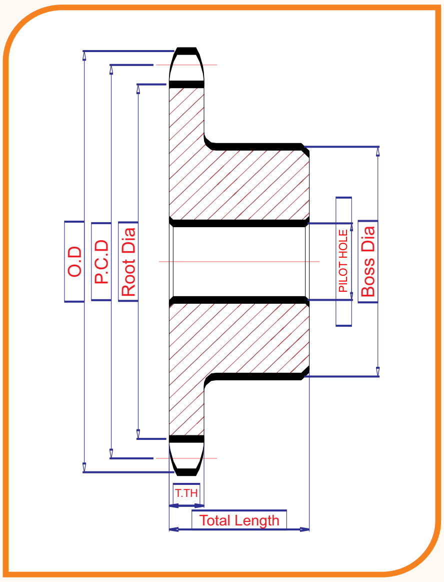

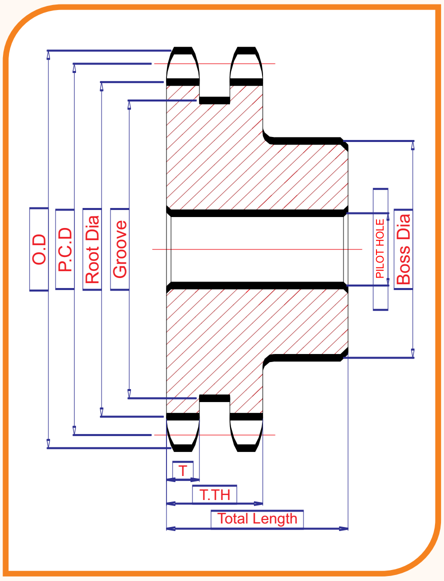

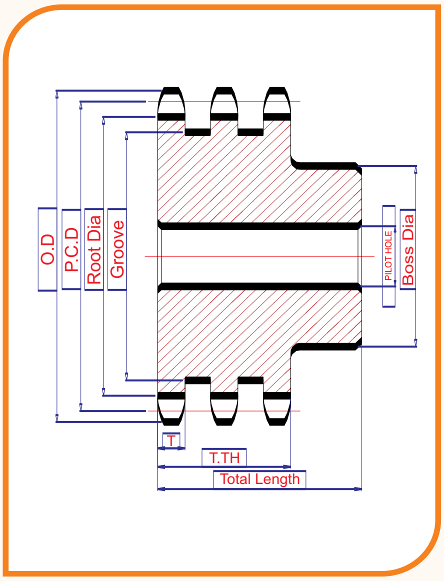

SPROCKET
5/8" X 3/8"

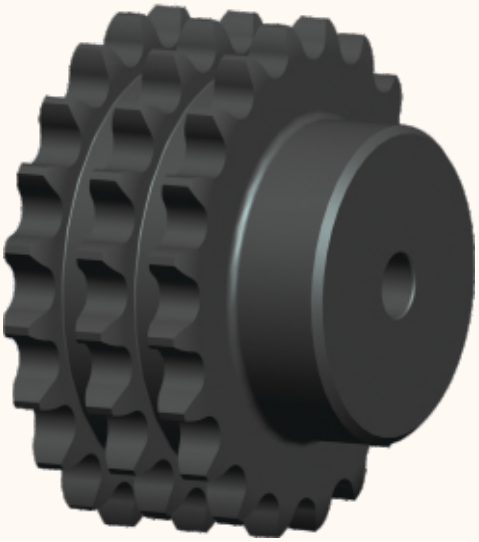

TEETH	O.D	P.C.D	ROOT DIA	SIMPLEX		
				BOSS DIA	TOTAL LENGTH	TOOTH THICKNESS
8	47	41.48	31.32	22	25	9.1
9	52.6	46.42	36.26	27	25	9.1
10	57.5	51.37	41.21	32	25	9.1
11	63	56.35	46.18	37	27	9.1
12	68	61.34	51.18	42	27	9.1
13	73	66.32	56.16	47	27	9.1
14	78	71.34	61.18	52	27	9.1
15	83	76.36	66.2	57	27	9.1
16	88	81.37	71.21	62	27	9.1
17	93	86.39	76.23	67	27	9.1
18	98	91.42	81.26	72	27	9.1
19	103.3	96.45	86.29	77	27	9.1
20	108.4	101.48	91.32	82	27	9.1
21	113.4	106.52	96.36	87	27	9.1
22	118	111.55	101.39	92	27	9.1
23	123.5	116.58	106.42	*70	34	9.1
24	128.3	121.62	111.46	*70	34	9.1
25	134	126.66	116.5	*70	34	9.1
26	139	131.7	121.54	*70	34	9.1
27	144	136.75	126.59	*75	34	9.1
28	148.7	141.78	131.62	*75	34	9.1
29	153.8	146.83	136.67	*75	34	9.1
30	158.8	151.87	141.71	*75	34	9.1
31	163.9	156.92	146.76	*75	34	9.1
32	168.9	161.96	151.8	*75	34	9.1
33	174.5	167	156.81	*80	34	9.1
34	179	172.05	161.89	*80	34	9.1
35	184.1	177.1	166.94	*80	34	9.1
36	189.1	182.15	171.99	*80	34	9.1
37	194.2	187.2	177.04	*80	34	9.1
38	199.2	192.24	182.08	*80	34	9.1
39	204.2	197.29	187.13	*80	34	9.1
40	209.3	202.34	192.18	*80	34	9.1
41	214.8	207.38	197.22	*85	34	9.1
42	219.3	212.43	202.27	*85	34	9.1
43	224.9	217.48	207.32	*85	34	9.1
44	230	222.53	212.37	*85	34	9.1
45	235	227.58	217.42	*85	34	9.1
46	240.1	232.63	222.47	*90	34	9.1
47	245.1	237.68	227.52	*90	34	9.1
48	250.2	242.73	232.57	*90	34	9.1
49	255.2	247.78	237.62	*90	34	9.1
50	260.3	252.82	242.66	*90	34	9.1
51	265.3	257.87	247.71	*95	40	9.1
52	270.4	262.92	252.76	*95	40	9.1
53	275.4	267.97	257.81	*95	40	9.1
54	280.5	293.03	262.87	*95	40	9.1
55	285.5	278.08	267.92	*95	40	9.1
56	290.6	283.13	272.97	*95	40	9.1
57	296	288.18	278.02	*95	40	9.1
58	300.7	293.23	283.07	*95	43	9.1
59	305.7	298.28	288.12	*95	43	9.1
60	310.8	303.33	293.17	*95	43	9.1
62	321.4	313.43	303.27	*100	43	9.1
64	331.5	323.53	313.37	*100	43	9.1
65	336.5	328.58	318.42	*100	43	9.1
66	341.6	333.64	232.48	*100	43	9.1
68	354.7	343.74	333.58	*100	43	9.1
70	361.8	353.84	343.68	*100	43	9.1
72	371.9	363.94	353.78	*120	43	9.1
75	387.1	379.1	368.94	*120	43	9.1
76	392.1	384.15	373.99	*120	43	9.1
78	402.2	394.25	384.09	*120	43	9.1
80	412.3	404.36	394.2	*120	43	9.1
85	437.6	429.62	419.46	*120	50	9.1
90	462.8	454.88	444.72	*120	50	9.1
95	488	480.14	469.98	*120	50	9.1
100	513.4	505.4	495.24	*120	50	9.1
110	563.9	555.92	545.76	*120	50	9.1
114	584.1	576.13	565.97	*120	50	9.1
120	614.4	606.45	596.29	*120	50	9.1
125	639.7	631.71	621.55	*120	50	9.1

DUPLEX			
BOSS DIA	TOTAL LENGTH	TOOTH THICKNESS	TOOTH
22	44	25.5	9
27	44	25.5	9
32	44	25.5	9
37	44	25.5	9
42	44	25.5	9
47	44	25.5	9
52	44	25.5	9
57	44	25.5	9
62	44	25.5	9
67	44	25.5	9
72	44	25.5	9
77	44	25.5	9
82	44	25.5	9
87	44	25.5	9
92	44	25.5	9
*70	49	25.5	9
*70	49	25.5	9
*70	49	25.5	9
*70	49	25.5	9
*75	49	25.5	9
*75	49	25.5	9
*75	49	25.5	9
*75	49	25.5	9
*75	49	25.5	9
*75	49	25.5	9
*80	49	25.5	9
*80	49	25.5	9
*80	49	25.5	9
*80	49	25.5	9
*80	49	25.5	9
*80	49	25.5	9
*80	49	25.5	9
*85	50	25.5	9
*85	50	25.5	9
*85	50	25.5	9
*85	50	25.5	9
*90	50	25.5	9
*90	50	25.5	9
*90	50	25.5	9
*90	50	25.5	9
*95	50	25.5	9
*95	50	25.5	9
*95	50	25.5	9
*95	50	25.5	9
*95	50	25.5	9
*95	50	25.5	9
*95	50	25.5	9
*95	50	25.5	9
*95	50	25.5	9
*100	50	25.5	9
*100	50	25.5	9
*100	55	25.5	9
*100	55	25.5	9
*120	55	25.5	9
*120	55	25.5	9
*120	55	25.5	9
*120	55	25.5	9
*120	55	25.5	9
*120	55	25.5	9
*120	55	25.5	9
*120	55	25.5	9
*120	55	25.5	9
*120	55	25.5	9
*120	55	25.5	9

TRIPLEX			
BOSS DIA	TOTAL LENGTH	TOOTH THICKNESS	TOOTH
22	58	40	8
27	58	40	8
32	58	40	8
37	58	40	8
42	58	40	8
47	58	40	8
52	58	40	8
57	58	40	8
62	58	40	8
67	58	40	8
72	58	40	8
77	58	40	8
82	58	40	8
87	58	40	8
92	58	40	8
*70	63	40	8
*70	63	40	8
*70	63	40	8
*70	63	40	8
*75	63	40	8
*75	63	40	8
*75	63	40	8
*75	63	40	8
*75	63	40	8
*75	63	40	8
*80	63	40	8
*80	63	40	8
*80	63	40	8
*80	63	40	8
*80	63	40	8
*80	63	40	8
*80	63	40	8
*85	63	40	8
*85	63	40	8
*85	63	40	8
*85	63	40	8
*90	63	40	8
*90	63	40	8
*90	63	40	8
*90	63	40	8
*95	63	40	8
*95	63	40	8
*95	63	40	8
*95	63	40	8
*95	63	40	8
*95	63	40	8
*95	63	40	8
*95	63	40	8
*95	63	40	8
*100	63	40	8
*100	63	40	8
*100	63	40	8
*100	63	40	8
*100	63	40	8
*100	63	40	8
*120	63	40	8
*120	63	40	8
*120	63	40	8
*120	63	40	8
*120	63	40	8
*120	63	40	8
*120	63	40	8
*120	63	40	8
*120	63	40	8
*120	63	40	8
*120	63	40	8
*120	63	40	8

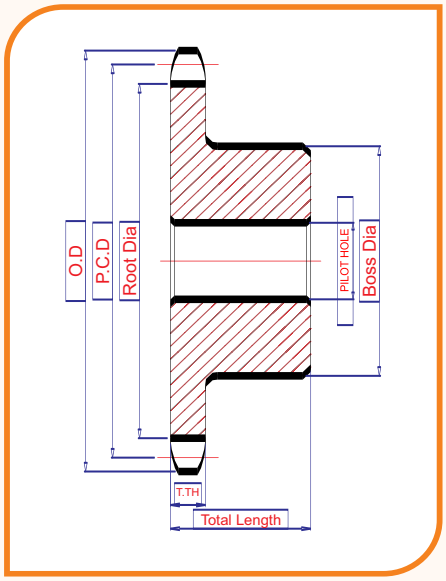

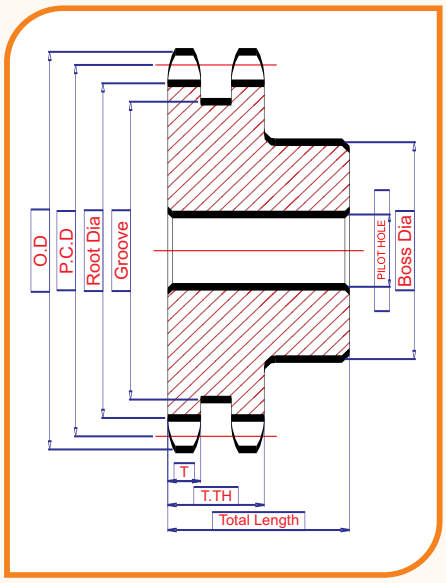

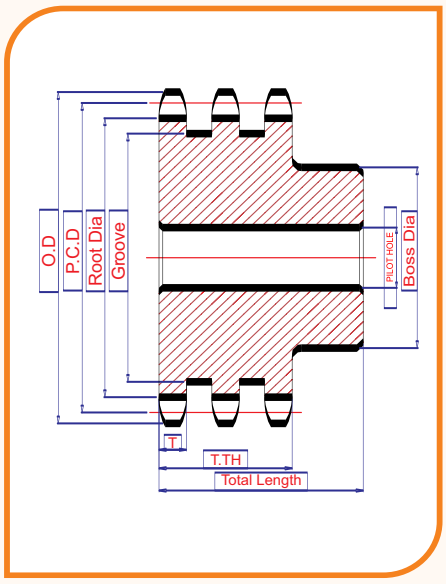

SPROCKET
3/4" X 7/16"

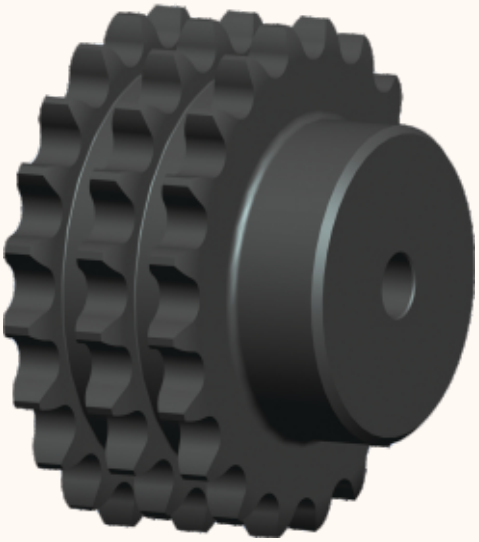

TEETH	O.D	P.C.D	ROOT DIA	SIMPLEX		
				BOSS DIA	TOTAL LENGTH	TOOTH THICKNESS
8	57.6	49.78	37.71	31	29	10.5
9	62	55.7	43.63	37	29	10.5
10	69	61.64	49.57	42	29	10.5
11	75	67.61	55.54	47	29	10.5
12	81.5	73.61	61.54	54	29	10.5
13	87.5	79.59	67.52	60	29	10.5
14	93.6	85.61	73.54	66	29	10.5
15	99.8	91.63	79.56	72	29	10.5
16	105.5	67.65	85.58	78	29	10.5
17	111.5	103.67	91.6	84	29	10.5
18	118	109.71	67.64	90	29	10.5
19	124.2	115.75	130.66	*70	35	10.5
20	129.7	121.78	109.71	*70	35	10.5
21	136	127.82	115.75	*70	35	10.5
22	141.8	133.86	121.79	*70	35	10.5
23	149	139.9	127.83	*75	35	10.5
24	153.9	145.94	133.87	*75	35	10.5
25	160	152	139.93	*75	35	10.5
26	165.9	158.04	145.97	*75	35	10.5
27	172.3	164.09	152.02	*80	35	10.5
28	178	170.13	158.06	*80	35	10.5
29	184.1	176.19	164.12	*80	35	10.5
30	190.5	182.25	170.18	*80	35	10.5
31	196.3	188.31	176.24	*85	35	10.5
32	203.3	194.35	182.28	*85	35	10.5
33	209.3	200.4	188.33	*85	35	10.5
34	214.6	206.46	194.39	*85	35	10.5
35	221	212.52	200.45	*90	35	10.5
36	226.8	218.58	206.51	*90	35	10.5
37	232.9	224.64	212.57	*90	35	10.5
38	239	230.69	218.62	*90	35	10.5
39	245.1	236.75	224.68	*90	35	10.5
40	251.3	142.81	230.74	*90	35	10.5
41	25702	248.86	236.79	*95	*35	10.5
42	264.5	254.92	242.85	*95	*35	10.5
43	270.5	261	249	*95	*35	10.5
44	276.5	267.03	254.96	*95	*35	10.5
45	282.5	273.09	261.02	*95	*35	10.5
46	287.9	279.15	267.08	*95	*35	10.5
47	294	285.21	273.14	*95	*35	10.5
48	300.1	291.27	279.2	*95	*35	10.5
49	306.2	297.33	258.26	*100	*35	10.5
50	312.3	303.39	291.32	*100	*35	10.5
51	318.4	309.45	297.38	*100	*35	10.5
52	324.5	315.51	303.44	*100	*35	10.5
53	330.5	321.57	309.5	*100	*35	10.5
54	336.6	327.63	315.56	*100	*35	10.5
55	342.7	333.69	321.62	*100	*35	10.5
56	348.7	339.75	327.68	*100	*35	10.5
57	355.4	345.81	333.74	*100	*35	10.5
58	361.5	351.87	339.8	*110	*35	10.5
59	367.5	357.93	345.86	*110	*35	10.5
60	373	363.99	351.92	*110	*35	10.5
62	385.1	376.12	364.05	*110	*35	10.5
64	395.2	388.24	376.17	*110	*35	10.5
65	403.2	394.3	382.23	*120	*35	10.5
66	409.3	400.36	388.29	*120	*35	10.5
68	421.4	412.49	400.42	*120	*35	10.5
70	433.6	424.61	412.54	*120	*35	10.5
72	447	436.73	424.66	*120	*35	10.5
75	463.9	454.92	442.91	*120	*35	10.5
76	469.9	460.98	448.91	*120	*35	10.5
78	482.1	473.1	461.03	*120	*35	10.5
80	494.2	485.23	473.16	*120	*35	10.5
85	524.5	515.54	503.47	*140	*35	10.5
90	554.8	545.85	533.78	*140	*35	10.5
95	585.1	576.17	564.1	*140	*35	10.5
100	615.4	606.48	594.41	*140	*35	10.5
110	676.1	667.11	655.04	*140	*35	10.5
114	700.6	691.36	679.29	*140	*35	10.5
120	736.7	727.74	215.67	*140	*35	10.5
125	767	758.06	745.99	*140	*35	10.5

DUPLEX			
BOSS DIA	TOTAL LENGTH	TOOTH THICKNESS	TOOTH
31	45	30.5	10
37	45	30.5	10
42	45	30.5	10
47	49	30.5	10
54	49	30.5	10
60	49	30.5	10
66	49	30.5	10
72	49	30.5	10
78	49	30.5	10
84	49	30.5	10
90	49	30.5	10
*70	54	30.5	10
*70	54	30.5	10
*70	54	30.5	10
*70	54	30.5	10
*75	54	30.5	10
*75	54	30.5	10
*75	54	30.5	10
*75	54	30.5	10
*80	54	30.5	10
*80	54	30.5	10
*80	54	30.5	10
*80	54	30.5	10
*85	54	30.5	10
*85	54	30.5	10
*85	54	30.5	10
*85	54	30.5	10
*90	54	30.5	10
*90	54	30.5	10
*90	54	30.5	10
*90	54	30.5	10
*90	54	30.5	10
*90	54	30.5	10
*95	54	30.5	10
*95	54	30.5	10
*95	54	30.5	10
*95	54	30.5	10
*95	54	30.5	10
*95	54	30.5	10
*95	54	30.5	10
*95	54	30.5	10
*100	54	30.5	10
*100	54	30.5	10
*100	54	30.5	10
*100	54	30.5	10
*100	54	30.5	10
*100	54	30.5	10
*100	54	30.5	10
*100	54	30.5	10
*100	54	30.5	10
*100	54	30.5	10
*110	54	30.5	10
*110	54	30.5	10
*110	54	30.5	10
*110	60	30.5	10
*110	60	30.5	10
*120	60	30.5	10
*120	60	30.5	10
*120	60	30.5	10
*120	60	30.5	10
*120	60	30.5	10
*120	60	30.5	10
*120	60	30.5	10
*120	60	30.5	10
*120	60	30.5	10
*140	60	30.5	10
*140	60	30.5	10
*140	60	30.5	10
*140	60	30.5	10
*140	60	30.5	10
*140	60	30.5	10
*140	60	30.5	10
*140	60	30.5	10

TRIPLEX			
BOSS DIA	TOTAL LENGTH	TOOTH THICKNESS	TOOTH
31	68	49	10
37	68	49	10
42	68	49	10
47	68	49	10
54	68	49	10
60	68	49	10
66	68	49	10
72	68	49	10
78	68	49	10
84	68	49	10
90	68	49	10
*70	73	49	10
*70	73	49	10
*70	73	49	10
*70	73	49	10
*75	73	49	10
*75	73	49	10
*75	73	49	10
*75	73	49	10
*80	73	49	10
*80	73	49	10
*80	73	49	10
*80	73	49	10
*85	73	49	10
*85	73	49	10
*85	73	49	10
*85	73	49	10
*90	73	49	10
*90	73	49	10
*90	73	49	10
*90	73	49	10
*90	73	49	10
*90	73	49	10
*95	73	49	10
*95	73	49	10
*95	73	49	10
*95	73	49	10
*95	73	49	10
*95	73	49	10
*95	73	49	10
*95	73	49	10
*100	73	49	10
*100	73	49	10
*100	73	49	10
*100	73	49	10
*100	73	49	10
*100	73	49	10
*100	73	49	10
*100	73	49	10
*100	73	49	10
*100	73	49	10
*110	73	49	10
*110	73	49	10
*110	73	49	10
*110	78	49	10
*110	78	49	10
*120	78	49	10
*120	78	49	10
*120	78	49	10
*120	78	49	10
*120	78	49	10
*120	78	49	10
*120	78	49	10
*120	78	49	10
*120	78	49	10
*140	78	49	10
*140	78	49	10
*140	78	49	10
*140	78	49	10
*140	78	49	10
*140	78	49	10
*140	78	49	10
*140	78	49	10
*140	78	49	10

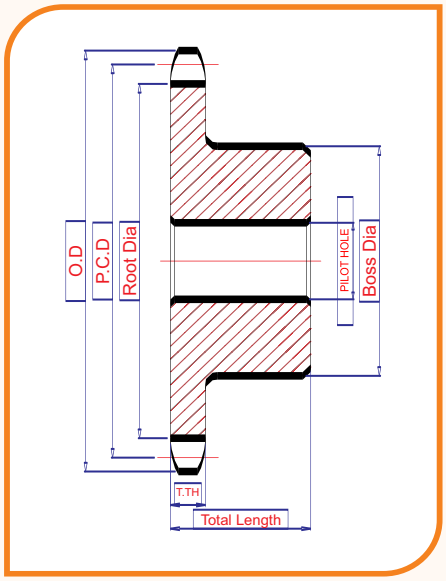

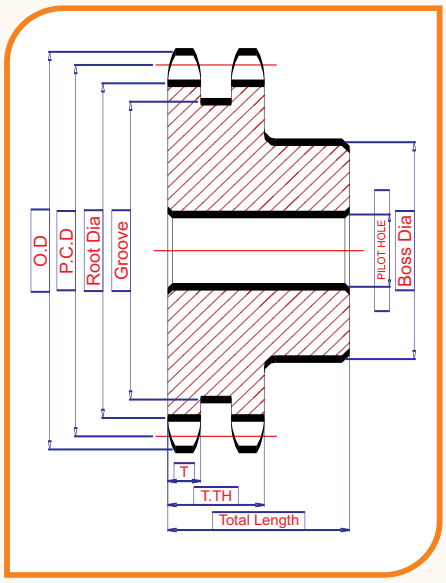

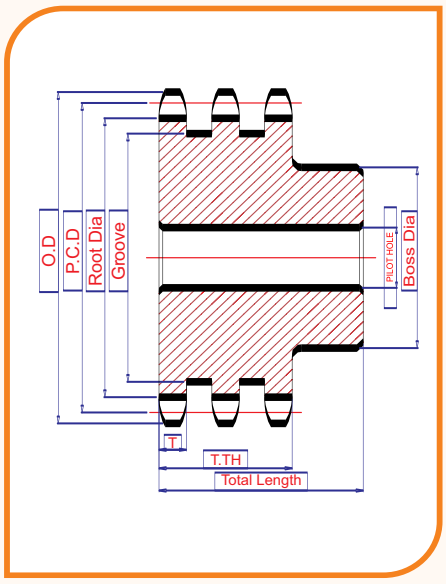

SPROCKET
1" X 17.02 MM

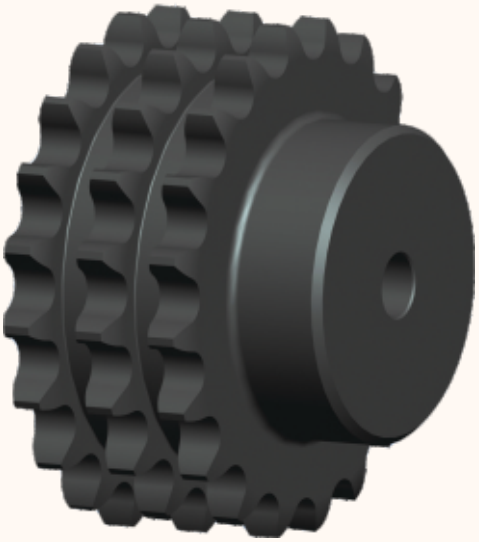

TEETH	O.D	P.C.D	ROOT DIA	SIMPLEX		
				BOSS DIA	TOTAL LENGTH	TOOTH THICKNESS
8	77	66.37	50.49	42	35	16.2
9	85	74.27	58.39	50	35	16.2
10	93	82.19	66.31	55	35	16.2
11	99.5	90.14	74.26	61	40	16.2
12	109	98.14	82.26	69	40	16.2
13	117	106.12	90.24	78	40	16.2
14	125	114.15	98.27	*75	40	16.2
15	133	122.17	106.29	*75	40	16.2
16	141	130.2	114.32	*80	45	16.2
17	149	138.22	122.34	*80	45	16.2
18	157	146.28	130.4	*90	45	16.2
19	165.2	154.33	138.45	*90	45	16.2
20	173.2	162.38	146.5	*95	45	16.2
21	181.2	170.43	154.55	*95	50	16.2
22	189.3	178.48	162.6	*95	50	16.2
23	197.5	186.53	170.65	*100	50	16.2
24	205.5	194.59	178.71	*100	50	16.2
25	213.5	202.66	186.78	*100	50	16.2
26	221.6	210.72	194.84	*100	50	16.2
27	229.6	218.79	202.91	*100	50	16.2
28	237.7	226.85	210.97	*100	50	16.2
29	245.8	234.92	219.04	*105	50	16.2
30	254	243	227.12	*105	50	16.2
31	262	251.08	235.2	*105	50	16.2
32	270	259.13	243.25	*105	50	16.2
33	278.5	267.21	251.33	*105	50	16.2
34	287	275.28	259.4	*105	50	16.2
35	296.2	283.36	267.48	*115	50	16.2
36	304.6	291.44	275.56	*115	50	16.2
37	312.6	299.51	289.63	*115	50	16.2
38	320.7	307.59	297.71	*115	50	16.2
39	328.8	315.67	299.79	*115	50	16.2
40	336.9	323.75	307.87	*115	50	16.2
41	345	331.81	315.93	*120	68	16.2
42	353	339.89	324.01	*120	68	16.2
43	361.1	347.94	332.06	*120	68	16.2
44	369.1	356.05	340.17	*120	68	16.2
45	377.1	364.12	348.24	*120	68	16.2
46	385.2	372.2	356.32	*120	68	16.2
47	393.2	380.28	364.4	*120	68	16.2
48	401.3	388.36	372.48	*120	68	16.2
49	409.3	396.44	380.56	*120	68	16.2
50	417.4	404.52	388.64	*120	68	16.2
51	425.5	412.6	396.72	*120	68	16.2
52	433.6	420.68	404.8	*120	68	16.2
53	441.7	428.76	412.88	*120	68	16.2
54	448.3	436.84	420.96	*120	68	16.2
55	457.9	444.92	429.04	*120	68	16.2
56	466	453.01	437.13	*120	68	16.2
57	474	461.08	445.2	*125	68	16.2
58	482.1	469.16	453.28	*125	68	16.2
59	490.2	477.24	461.36	*125	68	16.2
60	498.3	485.33	469.45	*125	68	16.2
62	514.5	501.49	485.61	*125	68	16.2
64	530.7	517.65	501.77	*125	68	16.2
65	538.8	525.73	509.85	*125	68	16.2
66	546.8	533.21	517.98	*125	68	16.2
68	562.9	549.98	534.1	*125	68	16.2
70	579.2	566.15	550.27	*125	68	16.2
72	595.4	582.31	566.43	*130	68	16.2
75	619.7	606.56	590.68	*130	68	16.2
76	627	614.64	598.76	*130	68	16.2
78	643.3	630.81	614.93	*130	68	16.2
80	660	646.97	631.09	*130	68	16.2
85	699.9	687.39	671.51	*130	78	16.2
90	740.3	727.8	711.92	*130	78	16.2
95	781.1	768.22	952.34	*130	78	16.2
100	821.1	808.64	792.76	*130	78	16.2
110	902	889.48	873.6	*130	78	16.2
114	934.3	921.81	905.93	*130	78	16.2
120	982.8	970.32	954.44	*130	78	16.2
125	1023.3	1010.73	994.85	*130	78	16.2

DUPLEX			
BOSS DIA	TOTAL LENGTH	TOOTH THICKNESS	TOOTH
42	65	47.7	15.8
50	65	47.7	15.8
55	65	47.7	15.8
61	70	47.7	15.8
69	70	47.7	15.8
78	70	47.7	15.8
*75	70	47.7	15.8
*75	70	47.7	15.8
*80	70	47.7	15.8
*80	70	47.7	15.8
*90	70	47.7	15.8
*90	70	47.7	15.8
*95	70	47.7	15.8
*95	70	47.7	15.8
*95	70	47.7	15.8
*100	70	47.7	15.8
*100	70	47.7	15.8
*100	70	47.7	15.8
*100	70	47.7	15.8
*100	70	47.7	15.8
*100	70	47.7	15.8
*105	70	47.7	15.8
*105	70	47.7	15.8
*105	70	47.7	15.8
*105	70	47.7	15.8
*105	70	47.7	15.8
*105	70	47.7	15.8
*115	70	47.7	15.8
*115	70	47.7	15.8
*115	70	47.7	15.8
*115	70	47.7	15.8
*115	70	47.7	15.8
*115	70	47.7	15.8
*120	70	47.7	15.8
*120	70	47.7	15.8
*120	70	47.7	15.8
*120	70	47.7	15.8
*120	70	47.7	15.8
*120	70	47.7	15.8
*120	70	47.7	15.8
*120	70	47.7	15.8
*120	70	47.7	15.8
*120	70	47.7	15.8
*120	85	47.7	15.8
*120	85	47.7	15.8
*120	85	47.7	15.8
*120	85	47.7	15.8
*120	85	47.7	15.8
*120	85	47.7	15.8
*125	85	47.7	15.8
*125	85	47.7	15.8
*125	85	47.7	15.8
*125	85	47.7	15.8
*125	85	47.7	15.8
*125	90	47.7	15.8
*125	90	47.7	15.8
*125	90	47.7	15.8
*125	90	47.7	15.8
*125	90	47.7	15.8
*130	90	47.7	15.8
*130	90	47.7	15.8
*130	90	47.7	15.8
*130	90	47.7	15.8
*130	90	47.7	15.8
*130	90	47.7	15.8
*130	90	47.7	15.8
*130	90	47.7	15.8
*130	90	47.7	15.8
*130	90	47.7	15.8
*130	90	47.7	15.8
*130	90	47.7	15.8

TRIPLEX			
BOSS DIA	TOTAL LENGTH	TOOTH THICKNESS	TOOTH
42	95	79.6	15.8
50	95	79.6	15.8
55	95	79.6	15.8
61	100	79.6	15.8
69	100	79.6	15.8
78	100	79.6	15.8
*75	100	79.6	15.8
*75	100	79.6	15.8
*80	100	79.6	15.8
*80	100	79.6	15.8
*90	100	79.6	15.8
*90	100	79.6	15.8
*95	100	79.6	15.8
*95	100	79.6	15.8
*95	100	79.6	15.8
*100	100	79.6	15.8
*100	100	79.6	15.8
*100	100	79.6	15.8
*100	100	79.6	15.8
*100	100	79.6	15.8
*100	100	79.6	15.8
*105	100	79.6	15.8
*105	100	79.6	15.8
*105	100	79.6	15.8
*105	100	79.6	15.8
*105	100	79.6	15.8
*105	100	79.6	15.8
*115	100	79.6	15.8
*115	100	79.6	15.8
*115	100	79.6	15.8
*115	100	79.6	15.8
*115	100	79.6	15.8
*115	100	79.6	15.8
*120	100	79.6	15.8
*120	100	79.6	15.8
*120	100	79.6	15.8
*120	100	79.6	15.8
*120	100	79.6	15.8
*120	100	79.6	15.8
*120	100	79.6	15.8
*120	100	79.6	15.8
*120	100	79.6	15.8
*120	100	79.6	15.8
*120	110	79.6	15.8
*120	110	79.6	15.8
*120	110	79.6	15.8
*120	110	79.6	15.8
*120	110	79.6	15.8
*120	110	79.6	15.8
*125	110	79.6	15.8
*125	110	79.6	15.8
*125	110	79.6	15.8
*125	110	79.6	15.8
*125	110	79.6	15.8
*125	110	79.6	15.8
*125	110	79.6	15.8
*125	110	79.6	15.8
*125	110	79.6	15.8
*125	110	79.6	15.8
*130	110	79.6	15.8
*130	110	79.6	15.8
*130	110	79.6	15.8
*130	110	79.6	15.8
*130	110	79.6	15.8
*130	110	79.6	15.8
*130	110	79.6	15.8
*130	110	79.6	15.8
*130	110	79.6	15.8
*130	110	79.6	15.8
*130	110	79.6	15.8
*130	110	79.6	15.8
*130	110	79.6	15.8
*130	110	79.6	15.8

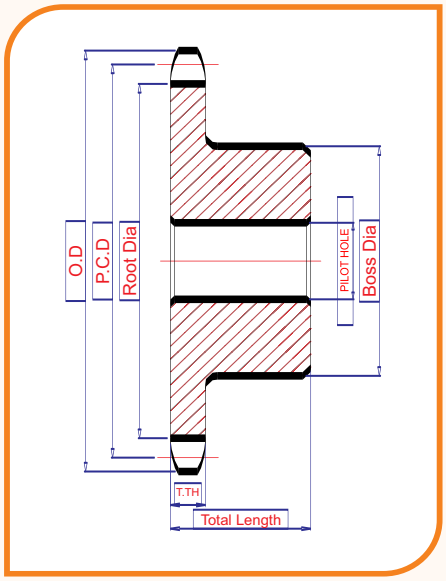

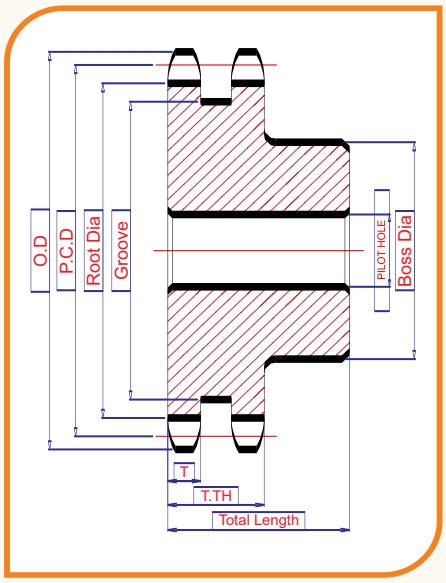

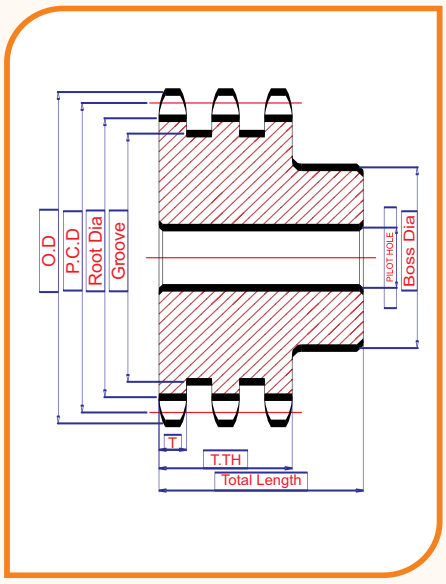

SPROCKET
1.25” X 3/4”

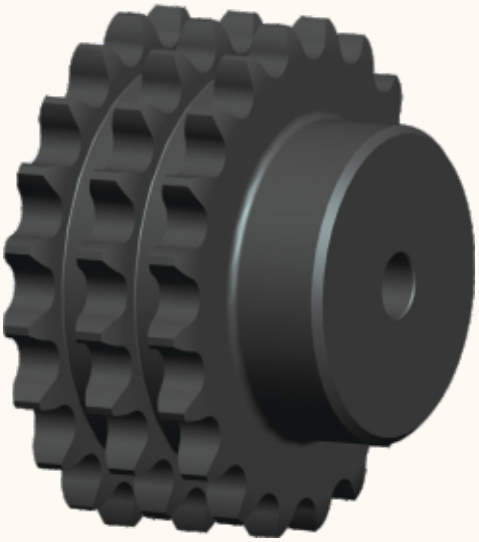

TEETH	O.D	P.C.D	ROOT DIA	SIMPLEX		
				BOSS DIA	TOTAL LENGTH	TOOTH THICKNESS
8	98.1	82.96	63.91	53	40	18
9	108	92.94	73.79	63	40	18
10	117.9	102.74	83.69	70	40	18
11	127.8	112.68	93.63	*70	45	18
12	137.8	122.68	103.63	*75	45	18
13	147.8	132.65	113.6	*85	45	18
14	157.8	142.68	123.63	*85	45	18
15	167.9	152.72	133.67	*85	45	18
16	177.9	162.75	143.7	*90	45	18
17	187.9	172.78	153.73	*90	45	18
18	198	182.85	163.8	*90	45	18
19	208.1	192.91	173.86	*90	45	18
20	218.1	202.98	183.93	*90	45	18
21	228.2	213.4	193.99	*95	45	18
22	238.3	223.11	204.06	*95	45	18
23	248.3	233.17	214.12	*95	45	18
24	258.4	243.23	224.18	*95	45	18
25	268.5	253.33	234.28	*95	45	18
26	278.6	263.4	244.35	*95	45	18
27	288.6	273.56	254.51	*100	45	18
28	298.7	283.62	264.57	*100	45	18
29	308.8	293.65	274.6	*100	45	18
30	318.9	303.75	284.7	*100	45	18
31	329	313.86	294.81	*100	45	18
32	339.1	323.91	304.86	*100	45	18
33	349.2	334.1	315.05	*110	45	18
34	359.3	344.1	325.05	*110	45	18
35	369.4	354.2	335.15	*110	45	18
36	379.5	364.3	345.25	*110	45	18
37	389.5	374.39	355.34	*120	45	18
38	399.6	384.49	365.44	*120	45	18
39	409.7	394.59	375.54	*120	45	18
40	419.8	404.69	385.65	*120	45	18
41	429.9	414.77	395.72	*120	50	18
42	440	424.86	405.81	*120	50	18
43	450.1	3434.96	415.91	*120	50	18
44	460.2	445.06	426.01	*130	50	18
45	470.3	455.17	436.12	*130	50	18
46	480.3	465.25	446.2	*130	50	18
47	490.5	475.35	456.3	*130	50	18
48	500.6	485.45	466.4	*130	50	18
49	510.7	495.55	476.5	*130	50	18
50	520.8	505.65	486.6	*130	50	18
51	530.9	515.75	496.7	*150	60	18
52	541	525.85	506.8	*150	60	18
53	551.1	535.95	516.9	*150	60	18
54	561.2	546.06	527.01	*150	60	18
55	571.3	556.15	537.1	*150	60	18
56	581.4	566.25	547.2	*150	60	18
57	597.5	576.35	557.3	*150	60	18
58	601.6	586.45	567.4	*150	60	18
59	611.7	596.56	577.51	*150	60	18
60	621.8	606.65	587.6	*150	60	18
62	642	626.86	607.81	*150	60	18
64	662.2	647.07	628.02	*150	60	18
65	672.3	657.17	638.12	*150	60	18
66	682.4	667.27	648.22	*150	60	18
68	702.6	687.48	668.43	*150	60	18
70	722.8	707.68	688.63	*150	60	18
72	743.1	727.89	708.84	*150	60	18
75	773.3	758.19	739.14	*150	60	18
76	783.5	768.3	749.25	*150	60	18
80	823.9	808.71	789.66	*150	60	18
85	874.4	859.23	840.18	*150	60	18
90	924.9	909.76	890.71	*150	60	18
95	975.2	960.28	941.23	*150	60	18
100	1026	1010.8	991.75	*150	60	18
114	1167.4	1152.26	1133.21	*150	60	18

DUPLEX

BOSS DIA	TOTAL LENGTH	TOOTH THICKNESS	TOOTH
53	74	54	18
63	74	54	18
70	74	54	18
*70	74	54	18
*75	74	54	18
*85	79	54	18
*85	79	54	18
*85	79	54	18
*90	79	54	18
*90	79	54	18
*90	79	54	18
*90	79	54	18
*90	79	54	18
*95	79	54	18
*95	79	54	18
*95	79	54	18
*95	79	54	18
*95	79	54	18
*95	79	54	18
*100	79	54	18
*100	79	54	18
*100	79	54	18
*100	79	54	18
*100	79	54	18
*100	79	54	18
*110	79	54	18
*110	79	54	18
*110	79	54	18
*110	79	54	18
*120	79	54	18
*120	79	54	18
*120	79	54	18
*120	79	54	18
*120	84	54	18
*120	84	54	18
*120	84	54	18
*130	84	54	18
*130	84	54	18
*130	84	54	18
*130	84	54	18
*130	84	54	18
*130	84	54	18
*130	84	54	18
*150	90	54	18
*150	90	54	18
*150	90	54	18
*150	90	54	18
*150	90	54	18
*150	90	54	18
*150	90	54	18
*150	90	54	18
*150	90	54	18
*150	90	54	18
*150	90	54	18
*150	90	54	18
*150	90	54	18
*150	90	54	18
*150	90	54	18
*150	90	54	18
*150	100	54	18
*150	100	54	18
*150	100	54	18
*150	100	54	18
*150	100	54	18
*150	100	54	18
*150	100	54	18
*150	100	54	18
*150	100	54	18

TRIPLEX

BOSS DIA	TOTAL LENGTH	TOOTH THICKNESS	TOOTH
53	110	90	18
63	110	90	18
70	110	90	18
*70	110	90	18
*75	110	90	18
*85	115	90	18
*85	115	90	18
*85	115	90	18
*90	115	90	18
*90	115	90	18
*90	115	90	18
*90	115	90	18
*90	115	90	18
*95	115	90	18
*95	115	90	18
*95	115	90	18
*95	115	90	18
*95	115	90	18
*95	115	90	18
*100	115	90	18
*100	115	90	18
*100	115	90	18
*100	115	90	18
*100	115	90	18
*100	115	90	18
*110	115	90	18
*110	115	90	18
*110	115	90	18
*110	115	90	18
*120	115	90	18
*120	115	90	18
*120	115	90	18
*120	115	90	18
*120	115	90	18
*120	115	90	18
*120	115	90	18
*130	115	90	18
*130	115	90	18
*130	115	90	18
*130	115	90	18
*130	115	90	18
*130	115	90	18
*130	115	90	18
*150	120	90	18
*150	120	90	18
*150	120	90	18
*150	120	90	18
*150	120	90	18
*150	120	90	18
*150	120	90	18
*150	120	90	18
*150	120	90	18
*150	120	90	18
*150	120	90	18
*150	120	90	18
*150	120	90	18
*150	120	90	18
*150	120	90	18
*150	120	90	18
*150	120	90	18
*150	120	90	18
*150	120	90	18
*150	120	90	18
*150	120	90	18
*150	120	90	18
*150	120	90	18
*150	120	90	18
*150	120	90	18

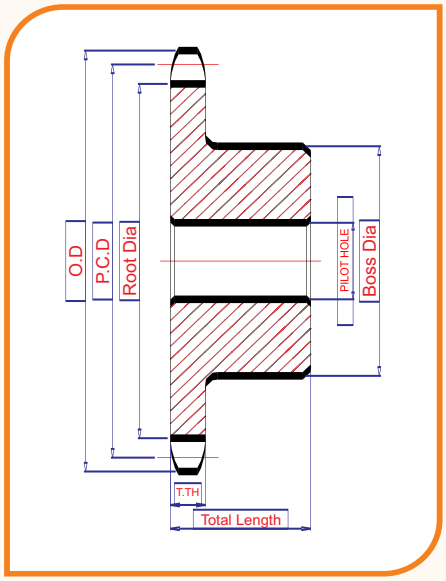

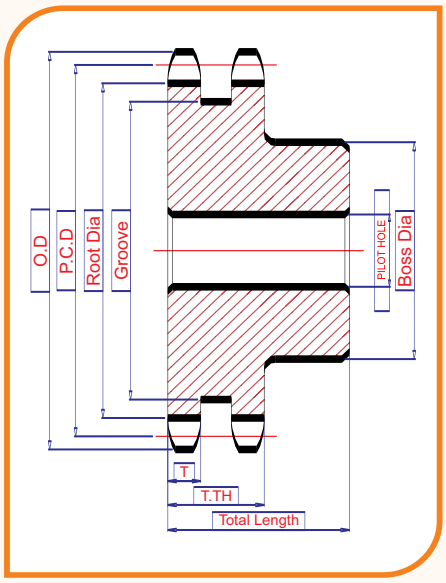

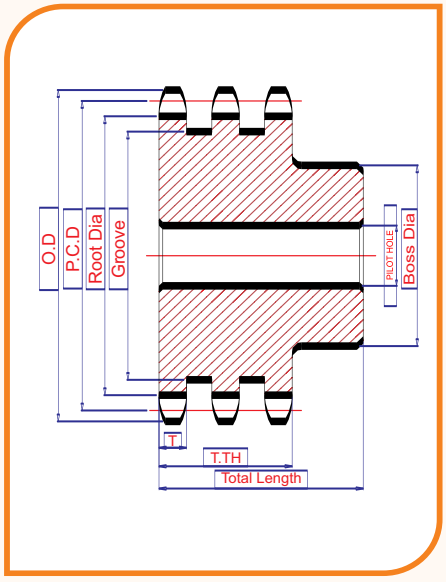

SPROCKET
1.50" X 1"

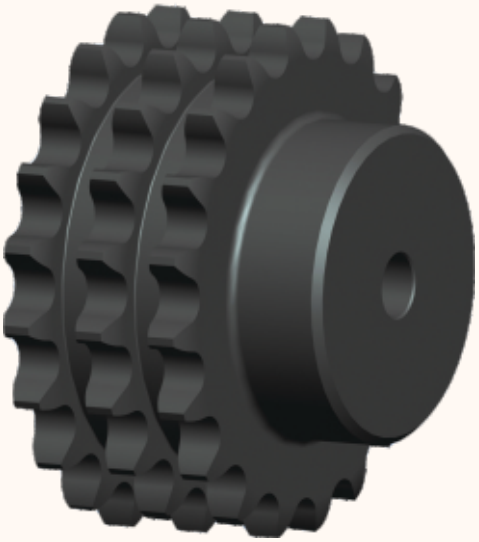

TEETH	O.D	P.C.D	ROOT DIA	SIMPLEX		
				BOSS DIA	TOTAL LENGTH	TOOTH THICKNESS
8	115	99.55	74.15	60	45	23.1
9	126.4	111.4	86	70	45	23.1
10	138	123.29	97.89	80	45	23.1
11	150	135.21	109.81	90	48	23.1
12	162	147.22	121.82	102	48	23.1
13	174.2	159.18	133.78	*100	48	23.1
14	186.2	171.22	145.82	*100	48	23.1
15	198.2	183.26	157.86	*100	48	23.1
16	210.3	195.3	169.9	*110	48	23.1
17	222.3	207.34	181.94	*110	48	23.1
18	234.3	219.42	194.02	*110	48	23.1
19	246.5	231.49	206.09	*110	48	23.1
20	258.6	243.57	218.17	*110	48	23.1
21	270.6	255.63	230.23	*110	48	23.1
22	282.7	267.73	242.33	*110	48	23.1
23	294.8	279.8	254.4	*110	48	23.1
24	306.8	291.88	266.48	*110	48	23.1
25	319	304	278.6	*120	48	23.1
26	331	316.08	290.68	*120	48	23.1
27	343.2	328.19	302.79	*120	48	23.1
28	355.2	340.27	314.87	*120	48	23.1
29	367.3	352.38	326.98	*120	48	23.1
30	379.5	364.5	339.1	*120	48	23.1
31	391.6	376.62	351.22	*120	55	23.1
32	403.7	388.69	363.29	*120	55	23.1
33	415.8	400.81	375.41	*120	55	23.1
34	427.8	412.93	387.53	*120	55	23.1
35	440	425.04	399.64	*120	55	23.1
36	452	437.16	411.76	*120	55	23.1
37	464.2	449.27	423.87	*130	55	23.1
38	476.2	461.39	435.99	*130	55	23.1
39	488.5	473.5	448.1	*130	55	23.1
40	500.6	485.62	460.22	*130	55	23.1
41	512.6	497.72	472.32	*130	55	23.1
42	524.7	509.83	484.43	*130	55	23.1
43	536.8	521.95	496.55	*130	55	23.1
44	549	534.07	508.67	*130	55	23.1
45	561.2	546.19	520.79	*130	55	23.1
46	573.3	558.3	532.9	*130	55	23.1
47	585.4	570.42	545.02	*130	55	23.1
48	597.4	982.54	557.14	*130	55	23.1
49	609.5	594.66	569.26	*150	55	23.1
50	621.7	606.78	281.38	*150	55	23.1
51	633.8	618.9	593.5	*150	60	23.1
52	646	631.01	605.61	*150	60	23.1
53	658	643.13	617.73	*150	60	23.1
54	970.2	655.28	629.88	*150	60	23.1
55	682.3	667.4	642	*150	60	23.1
56	694.4	679.51	654.11	*150	60	23.1
57	706.5	691.63	666.23	*150	60	23.1
58	718.6	703.74	678.34	*150	60	23.1
59	730.7	715.88	690.48	*150	60	23.1
60	742.8	727.97	702.57	*150	60	23.1
62	767.2	752.24	726.84	*150	60	23.1
64	791.3	776.48	751.08	*150	60	23.1
65	803.4	788.59	763.19	*150	60	23.1
66	815.6	800.71	775.31	*150	60	23.1
68	839.8	824.98	799.58	*150	60	23.1
70	864.2	849.21	823.81	*150	60	23.1
72	888.4	873.48	848.08	*150	60	23.1
75	924.8	909.83	884.43	*150	60	23.1
76	936.9	921.98	896.58	*150	60	23.1
80	985.4	670.44	945.04	*150	60	23.1
85	1046	1031.1	1005.7	*150	60	23.1
90	1167.3	1091.7	1066.3	*150	60	23.1

DUPLEX

BOSS DIA	TOTAL LENGTH	TOOTH THICKNESS	TOOTH
60	95	69	23
70	95	69	23
80	95	69	23
90	93	69	23
102	93	69	23
*100	93	69	23
*100	93	69	23
*100	93	69	23
*110	93	69	23
*110	93	69	23
*110	93	69	23
*110	93	69	23
*110	93	69	23
*110	98	69	23
*110	98	69	23
*110	98	69	23
*110	98	69	23
*120	98	69	23
*120	98	69	23
*120	98	69	23
*120	98	69	23
*120	98	69	23
*120	98	69	23
*120	100	69	23
*120	100	69	23
*120	100	69	23
*120	100	69	23
*120	100	69	23
*120	100	69	23
*130	100	69	23
*130	100	69	23
*130	100	69	23
*130	100	69	23
*130	100	69	23
*130	100	69	23
*130	100	69	23
*130	100	69	23
*130	100	69	23
*130	100	69	23
*130	100	69	23
*130	100	69	23
*150	100	69	23
*150	100	69	23
*150	100	69	23
*150	100	69	23
*150	100	69	23
*150	100	69	23
*150	100	69	23
*150	100	69	23
*150	100	69	23
*150	100	69	23
*150	100	69	23
*150	100	69	23
*150	110	69	23
*150	110	69	23
*150	110	69	23
*150	120	69	23
*150	120	69	23
*150	120	69	23
*150	120	69	23
*150	120	69	23
*150	120	69	23
*150	120	69	23
*150	120	69	23
*150	120	69	23

TRIPLEX

BOSS DIA	TOTAL LENGTH	TOOTH THICKNESS	TOOTH
60	140	119	23.5
70	140	119	23.5
80	140	119	23.5
90	140	119	23.5
102	140	119	23.5
*100	140	119	23.5
*100	140	119	23.5
*100	140	119	23.5
*110	140	119	23.5
*110	140	119	23.5
*110	140	119	23.5
*110	140	119	23.5
*110	140	119	23.5
*110	140	119	23.5
*110	140	119	23.5
*110	140	119	23.5
*110	140	119	23.5
*120	140	119	23.5
*120	140	119	23.5
*120	140	119	23.5
*120	140	119	23.5
*120	140	119	23.5
*120	140	119	23.5
*120	150	119	23.5
*120	150	119	23.5
*120	150	119	23.5
*120	150	119	23.5
*120	150	119	23.5
*120	150	119	23.5
*130	150	119	23.5
*130	150	119	23.5
*130	150	119	23.5
*130	150	119	23.5
*130	150	119	23.5
*130	150	119	23.5
*130	150	119	23.5
*130	150	119	23.5
*130	150	119	23.5
*130	150	119	23.5
*130	150	119	23.5
*130	150	119	23.5
*150	150	119	23.5
*150	150	119	23.5
*150	150	119	23.5
*150	150	119	23.5
*150	150	119	23.5
*150	150	119	23.5
*150	150	119	23.5
*150	150	119	23.5
*150	150	119	23.5
*150	150	119	23.5
*150	150	119	23.5
*150	150	119	23.5
*150	150	119	23.5
*150	150	119	23.5
*150	150	119	23.5
*150	150	119	23.5
*150	150	119	23.5
*150	150	119	23.5
*150	150	119	23.5
*150	150	119	23.5
*150	150	119	23.5
*150	150	119	23.5
*150	150	119	23.5

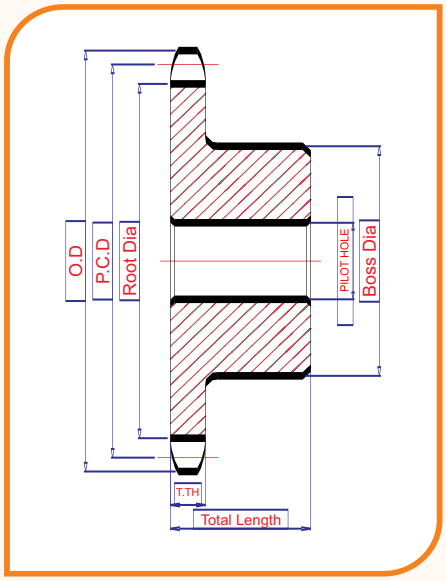

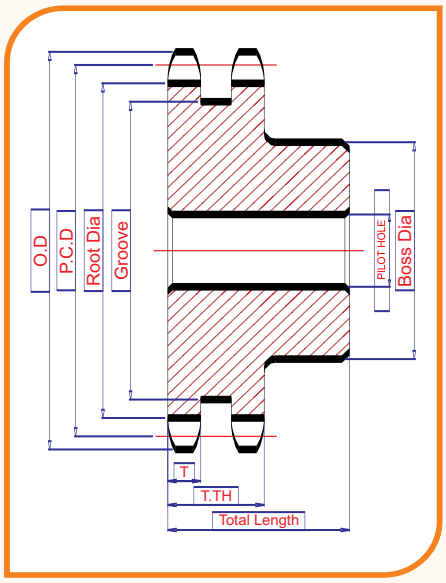

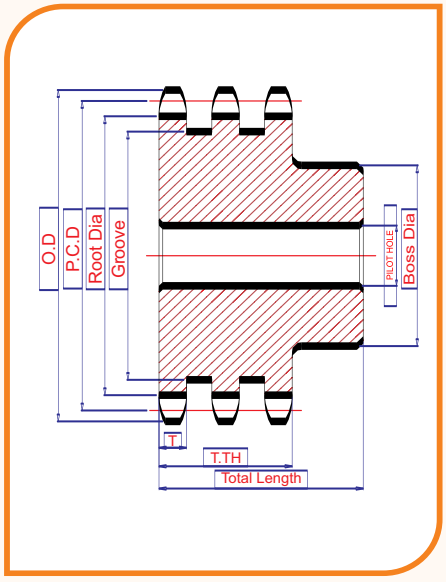

REAL ENTERPRISE

SUGAR MILL PRODUCTS

1. ASSEMBLY

Drive - Driven and Idler Sprocket Assembly for all carrier like Can Carrier, Bagasse Carrier, Rake Inter Carrier etc, including Shafts, Sprockets, Plumber Blocks etc.

2. CROWN PINION

Pinions are available up to 30 module width 800 mm material cast steel as per customers required grade.

3. MILL BEARING HOUSING

Mill size 33” X 66”, 36” X 72” Bearing Housing are available with inner.

4. TRPF SPROCKET

This Item we are manufacturing in bulk quantity and supplying into various OEM’s.

5. CONVEYOR CHAIN

We are Authorised dealer of TI Diamond Chain in Sugar Industries. We are supplying 9” Pitch block type chain, 6” Pitch for bagass can carrier etc.

6. CONVEYOR SPROCKETS

We are supplying conveyor sprocket for all carrier dimension wise detail of Sprockets are given.

First time in India
we Produced Maximum Range of
Conveyor Sprockets for.....

SUGAR MILL
FEEDER TABLE SPROCKET

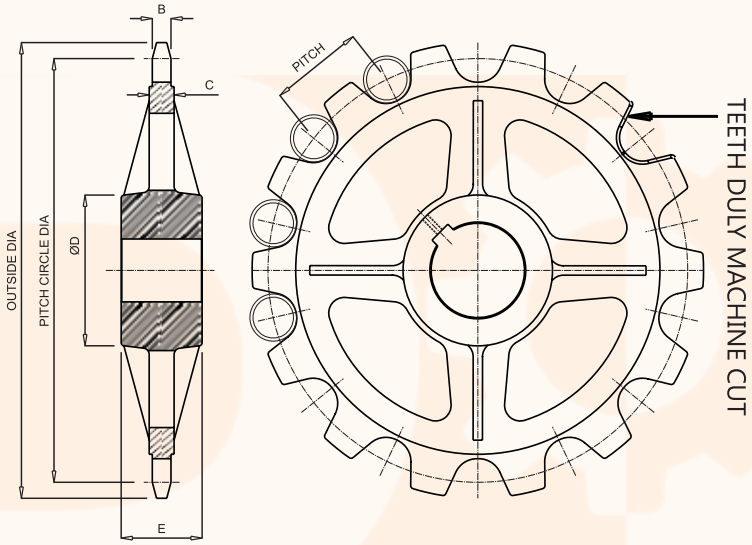

Pitch	No. of Teeth	Out Side Dia - A	P.C.D.	Roller Dia of Chain	B/C	D/E	Bore Min.	Bore Max.
150	10	536	485.41	75	30/40	200/120	90	160
150	11	583	532.41	75	30/40	200/120	90	160
150	12	630	579.55	75	30/40	200/120	90	160
150	13	678	626.78	75	30/40	200/120	90	160
150	14	725	674.09	75	30/40	200/120	90	160
150	15	772	721.46	75	30/40	200/120	90	160
150	16	820	768.87	75	30/40	200/120	90	160
150	17	867	816.32	75	30/40	200/120	90	160
150	18	915	863.81	75	30/40	200/120	90	160

* Sprocket material Cast steel as per IS:1030, Gr. 280 / 520 W. or require by customer.
* All Dimensions are in mm.
* Sprocket bore & keyway to be finished as per IS:2048-1983 or require by customer.
* We have calculated Hub Dia (D) as per minimum bore if bore size increase then Hub Dia will be change.

First time in India
we Produced Maximum Range of
Conveyor Sprockets for.....

SUGAR MILL
CANE CARRIER SPROCKET

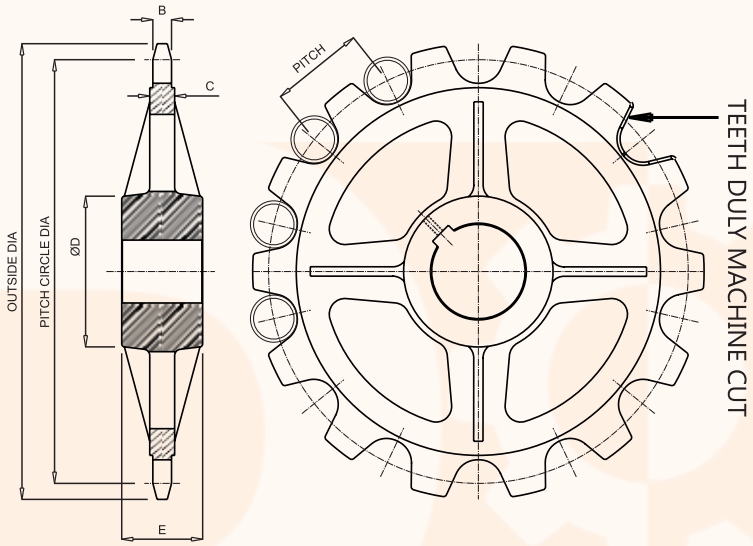

Pitch	No. of Teeth	Out Side Dia - A	P.C.D.	Roller Dia of Chain	B/C	D/E	Bore Min.	Bore Max.
150	10	535	493.17	76.2	30/40	160/120	90	125
150	11	585	540.93	76.2	30/40	175/120	100	140
150	12	630	588.82	76.2	30/40	195/120	110	150
150	13	680	636.81	76.2	30/40	210/120	120	165
150	14	725	684.87	76.2	30/40	230/120	130	185
150	15	775	733.00	76.2	30/40	230/120	130	185
150	16	825	781.17	76.2	30/40	230/120	130	185
150	17	870	829.38	76.2	30/40	230/120	130	185
150	18	918	877.63	76.2	30/40	230/120	130	185
152.4	10	535	493.17	76.2	30/40	160/120	90	125
152.4	11	585	540.93	76.2	30/40	175/120	100	140
152.4	12	630	588.82	76.2	30/40	195/120	110	150
152.4	13	680	636.81	76.2	30/40	210/120	120	165
152.4	14	725	684.87	76.2	30/40	230/120	130	185
152.4	15	775	733.00	76.2	30/40	230/120	130	185
152.4	16	825	781.17	76.2	30/40	230/120	130	185
152.4	17	870	829.38	76.2	30/40	230/120	130	185
152.4	18	918	877.63	76.2	30/40	230/120	130	185

* Sprocket material Cast steel as per IS:1030, Gr. 280 / 520 W. or require by customer.
* All Dimensions are in mm.
* Sprocket bore & keyway to be finished as per IS:2048-1983 or require by customer.
* We have calculated Hub Dia (D) as per minimum bore if bore size increase then Hub Dia will be change.

First time in India
we Produced Maximum Range of
Conveyor Sprockets for.....

SUGAR MILL
CANE CARRIER SPROCKET

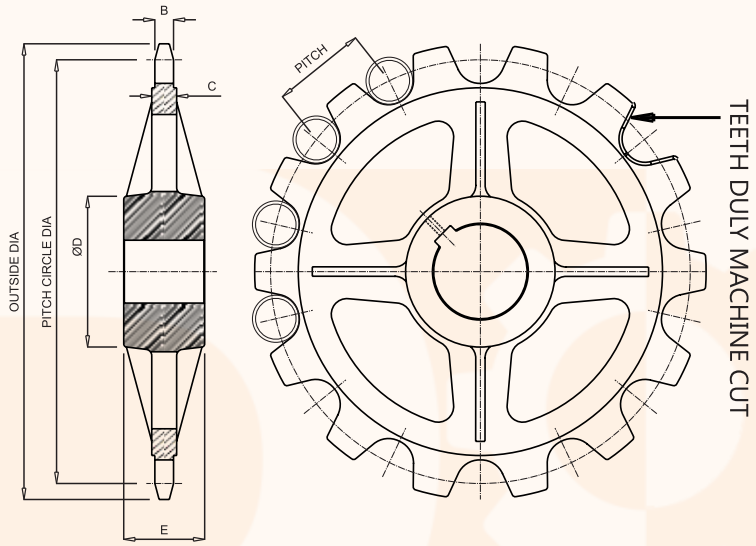

Pitch	No. of Teeth	Out Side Dia - A	P.C.D.	Roller Dia of Chain	B/C	D/E	Bore Min.	Bore Max.
200	10	697	647.21	90	30/40	160/150	90	125
200	11	760	709.89	90	30/40	175/150	100	140
200	12	823	772.74	90	30/40	195/150	110	150
200	13	886	835.71	90	30/40	210/150	120	165
200	14	949	898.71	90	30/40	230/150	130	185
200	15	1012	961.91	90	30/40	250/150	140	190
200	16	1075	1025.16	90	30/40	250/150	140	190
200	17	1138	1088.43	90	30/40	265/150	150	200
200	18	1202	1151.75	90	30/40	265/150	150	200
228.6	10	793	739.76	95	34/40	160/150	90	125
228.6	11	864	811.40	95	34/40	175/150	100	140
228.6	12	936	883.24	95	34/40	195/150	110	150
228.6	13	1008	955.22	95	34/40	210/150	120	165
228.6	14	1080	1027.31	95	34/40	230/150	130	185
228.6	15	1153	1099.50	95	34/40	250/150	140	190
228.6	16	1225	1171.76	95	34/40	250/150	140	190
228.6	17	1297	1244.08	95	34/40	265/150	150	200
228.6	18	1369	1316.45	95	34/40	265/150	150	200

* Sprocket material Cast steel as per IS:1030, Gr. 280 / 520 W. or require by customer.
* All Dimensions are in mm.
* Sprocket bore & keyway to be finished as per IS:2048-1983 or require by customer.
* We have calculated Hub Dia (D) as per minimum bore if bore size increase then Hub Dia will be change.

First time in India
we Produced Maximum Range of
Conveyor Sprockets for.....

SUGAR MILL
BAGASSE CARRIER SPROCKET

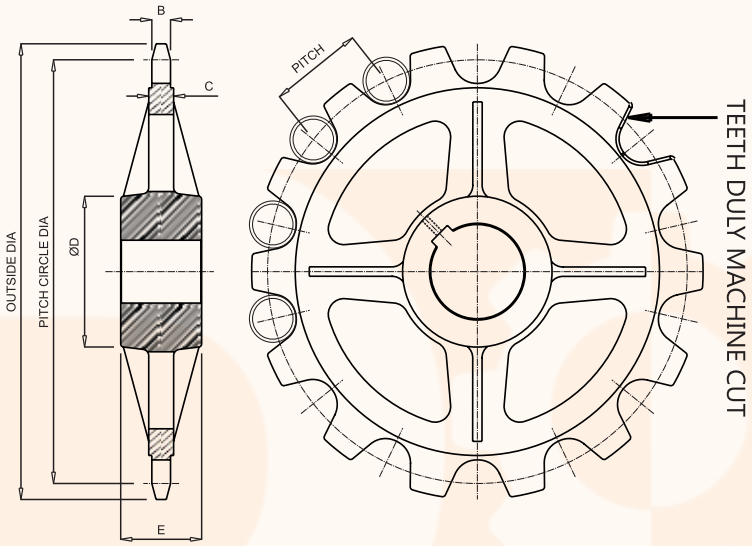

Pitch	No. of Teeth	Out Side Dia - A	P.C.D.	Roller Dia of Chain	B/C	D/E	Bore Min.	Bore Max.
150	10	536	485.41	75	30/40	160/60	90	125
150	11	583	532.41	75	30/40	175/120	100	140
150	12	630	579.55	75	30/40	195/120	110	150
150	13	678	626.78	75	30/40	210/120	120	165
150	14	725	674.09	75	30/40	230/120	130	185
150	15	772	721.46	75	30/40	230/120	140	185
150	16	820	768.87	75	30/40	230/120	130	185
150	17	867	816.32	75	30/40	230/120	130	185
150	18	915	863.81	75	30/40	230/120	130	185
152.4	10	535	493.17	76.2	30/40	160/120	90	125
152.4	11	585	540.93	76.2	30/40	175/120	100	140
152.4	12	630	588.82	76.2	30/40	195/120	110	150
152.4	13	680	636.81	76.2	30/40	210/120	120	165
152.4	14	725	684.87	76.2	30/40	230/120	130	185
152.4	15	775	733.00	76.2	30/40	230/120	140	185
152.4	16	825	781.17	76.2	30/40	230/120	130	185
152.4	17	870	829.38	76.2	30/40	230/120	130	185
152.4	18	918	877.63	76.2	30/40	230/120	130	185

* Sprocket material Cast steel as per IS:1030, Gr. 280 / 520 W. or require by customer.
* All Dimensions are in mm.
* Sprocket bore & keyway to be finished as per IS:2048-1983 or require by customer.
* We have calculated Hub Dia (D) as per minimum bore if bore size increase then Hub Dia will be change.

First time in India
we Produced Maximum Range of
Conveyor Sprockets for.....

SUGAR MILL
BAGASSE CARRIER SPROCKET

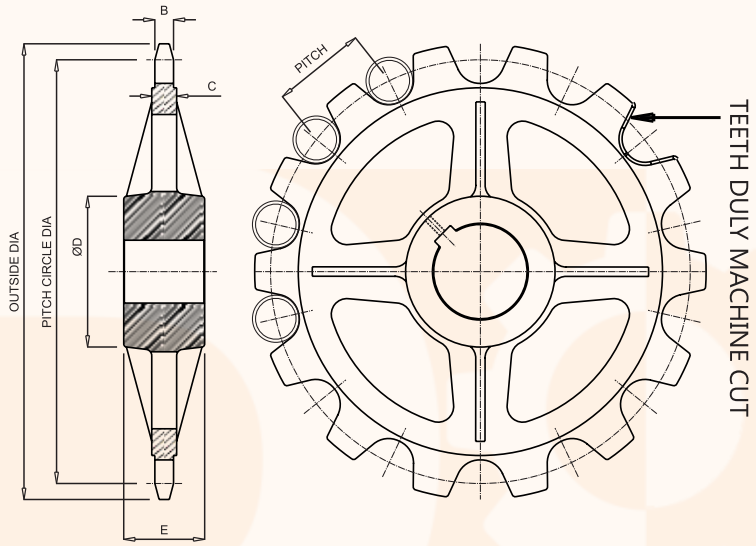

Pitch	No. of Teeth	Out Side Dia - A	P.C.D.	Roller Dia of Chain	B/C	D/E	Bore Min.	Bore Max.
200	10	697	647.21	90	30/40	160/150	90	125
200	11	760	709.89	90	30/40	175/150	100	140
200	12	823	772.74	90	30/40	195/150	110	150
200	13	886	835.71	90	30/40	210/150	120	165
200	14	949	898.71	90	30/40	230/150	130	185
200	15	1012	961.91	90	30/40	250/150	140	190
200	16	1075	1025.16	90	30/40	250/150	140	190
200	17	1138	1088.43	90	30/40	265/150	150	200
200	18	1202	1151.75	90	30/40	265/150	150	200
228.6	10	793	739.76	95	34/40	160/150	90	125
228.6	11	864	811.40	95	34/40	175/150	100	140
228.6	12	936	883.24	95	34/40	195/150	110	150
228.6	13	1008	955.22	95	34/40	210/150	120	165
228.6	14	1080	1027.31	95	34/40	230/150	130	185
228.6	15	1153	1099.50	95	34/40	250/150	140	190
228.6	16	1225	1171.76	95	34/40	250/150	140	190
228.6	17	1297	1244.08	95	34/40	265/150	150	200
228.6	18	1369	1316.45	95	34/40	265/150	150	200

* Sprocket material Cast steel as per IS:1030, Gr. 280 / 520 W. or require by customer.
* All Dimensions are in mm.
* Sprocket bore & keyway to be finished as per IS:2048-1983 or require by customer.
* We have calculated Hub Dia (D) as per minimum bore if bore size increase then Hub Dia will be change.

First time in India
we Produced Maximum Range of
Conveyor Sprockets for.....

SUGAR MILL
RAKE/INTER CARRIER SPROCKET

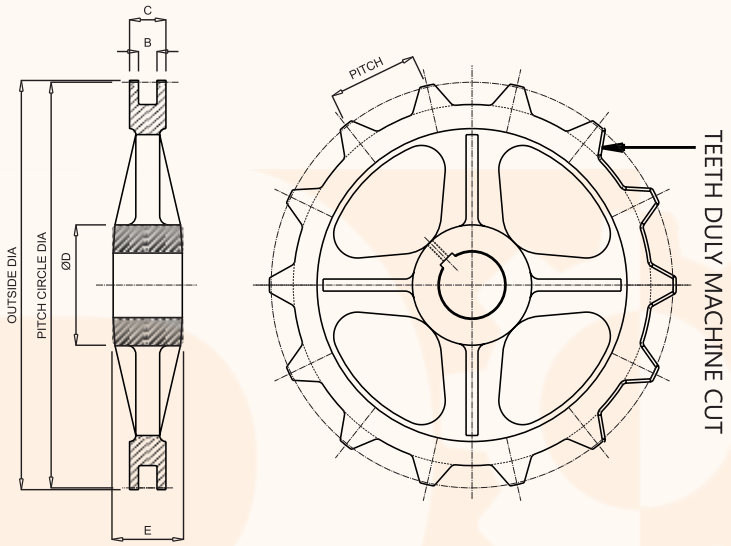

Pitch	No. of Teeth	Out Side Dia - A	P.C.D.	B/C	D/E	Bore Min.	Bore Max.
150	10	492	485.41	31/61	160/120	90	125
150	11	539	532.41	31/61	175/120	100	140
150	12	586	579.55	31/61	195/120	110	150
150	13	634	626.78	31/61	210/120	120	165
150	14	681	674.09	31/61	230/120	130	185
150	15	728	721.46	31/61	230/120	130	185
150	16	776	768.87	31/61	230/120	130	185
150	17	823	816.32	31/61	230/120	130	185
150	18	871	863.81	31/61	230/120	130	185
200	10	654	647.21	31/61	160/140	90	125
200	11	717	709.89	31/61	175/140	100	140
200	12	780	772.74	31/61	195/140	110	150
200	13	843	835.71	31/61	210/140	120	165
200	14	906	898.79	31/61	230/140	130	185
200	15	969	961.91	31/61	250/140	140	185
200	16	1032	1025.16	31/61	250/140	140	185
200	17	1095	1088.43	31/61	265/140	150	200
200	18	1159	1151.75	31/61	265/140	150	200

* Sprocket material Cast steel as per IS:1030, Gr. 280 / 520 W. or require by customer.
* All Dimensions are in mm.
* Sprocket bore & keyway to be finished as per IS:2048-1983 or require by customer.
* We have calculated Hub Dia (D) as per minimum bore if bore size increase then Hub Dia will be change.

First time in India
we Produced Maximum Range of
Conveyor Sprockets for.....

SUGAR MILL
RAKE/INTER CARRIER SPROCKET

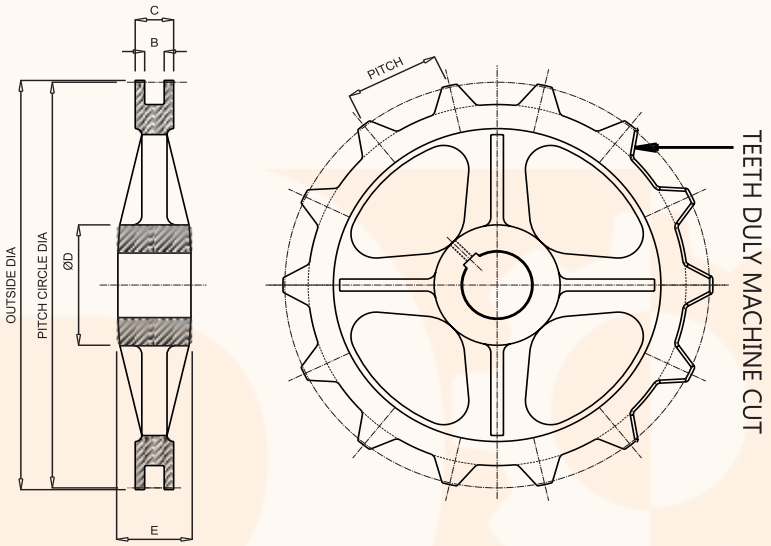

Pitch	No. of Teeth	Out Side Dia - A	P.C.D.	B/C	D/E	Bore Min.	Bore Max.
229	10	748	741.05	33/65	160/150	90	125
229	11	820	812.82	33/65	175/150	100	140
229	12	892	884.78	33/65	195/150	110	150
229	13	964	956.89	33/65	210/150	120	165
229	14	1036	1029.11	33/65	230/150	130	185
229	15	1108	1101.42	33/65	230/150	130	185
229	16	1181	1173.81	33/65	230/150	130	185
229	17	1253	1246.26	33/65	230/150	130	185
229	18	1326	1318.75	33/65	230/150	130	185
300	10	978	970.82	39/77	160/160	90	125
300	11	1072	1064.83	39/77	175/160	100	140
300	12	1166	1159.11	39/77	195/160	110	150
300	13	1261	1253.57	39/77	210/160	120	165
300	14	1355	1348.18	39/77	230/160	130	185
300	15	1450	1442.92	39/77	250/160	140	190
300	16	1545	1537.74	39/77	250/160	140	190
300	17	1640	1632.65	39/77	265/160	150	200
300	18	1735	1727.63	39/77	265/160	150	200

* Sprocket material Cast steel as per IS:1030, Gr. 280 / 520 W. or require by customer.
* All Dimensions are in mm.
* Sprocket bore & keyway to be finished as per IS:2048-1983 or require by customer.
* We have calculated Hub Dia (D) as per minimum bore if bore size increase then Hub Dia will be change.

BRITISH STANDARD ROLLER CHAINS

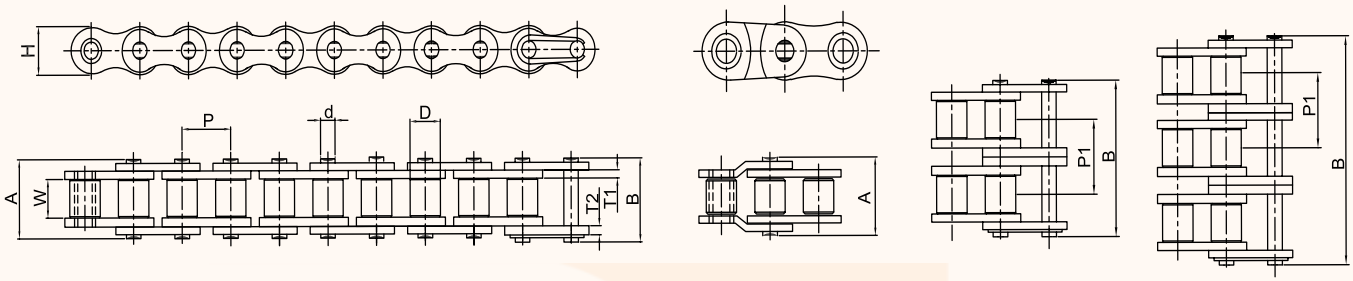

Intl. Ref. No.	No. of Strands	Pitch (P)	Width between Inner Plates (W) Min	Roller Diameter (D) Max	Bearing Pin Diarneter (D) Max	Plate Height IP (H) Max	Plate Thickness IP (T1)	Plate Thickness OP (T2)	Width Over Bearing Pin (A) Max	Width Over Joint Fastener (B) Max	Transverse Pitch (P1)	Average Weight Per Meter (Kgs)	Tensile Strength (Kgf) Min
04B-1	01	6.00	2.80	4.00	1.85	5.00	0.60	0.60	7.40	10.30	–	0.12	300
05B-1	01	8.00	3.00	5.00	2.31	7.10	0.75	0.75	8.60	11.70	5.64	0.18	510
05B-2	02								14.30	17.40		0.32	795
05B-3	03								19.90	23.00		0.50	1130
06B-1	01	9.525	5.72	6.35	3.28	8.20	1.25	1.00	13.50	16.80	10.24	0.40	920
06B-2	02								23.80	27.10		0.76	1725
06B-3	03								34.00	37.30		1.12	2540
08B-1	01	12.70	7.75	8.51	4.45	11.80	1.58	1.50	17.00	20.90	13.92	0.68	1840
08B-2	02								31.00	34.90		1.31	3270
08B-3	03								44.90	48.80		1.94	4850
10B-1	01	15.875	9.65	10.16	5.08	14.70	1.58	1.58	19.60	23.70	16.59	0.91	2290
10B-2	02								36.20	40.30		1.79	4540
10B-3	03								52.80	56.90		2.68	6810
12B-1	01	19.05	11.68	12.07	5.72	16.10	1.81	1.76	22.70	27.30	19.46	1.12	2960
12B-2	02								42.20	46.80		2.22	5900
12B-3	03								61.70	66.30		3.32	8850
16B-1	01	25.40	17.02	15.88	8.27	21.00	3.60	3.05	36.10	41.50	31.88	2.59	6120
16B-2	02								68.00	73.40		5.03	11600
16B-3	03								99.90	105.30		7.65	17400
20B-1	01	31.75	19.56	19.05	10.19	26.40	4.40	3.53	43.20	49.30	36.45	3.60	9690
20B-2	02								79.00	85.10		7.33	17330
20B-3	03								116.00	122.10		10.96	25490
24B-1	01	38.10	25.40	25.40	14.63	33.40	6.00	5.00	53.40	60.00	48.36	6.85	16310
24B-2	02								101.00	107.60		13.50	28550
24B-3	03								150.00	156.60		20.20	43330
28B-1	01	44.45	30.99	27.94	15.90	37.00	7.00	6.00	65.10	72.50	59.56	8.56	20390
28B-2	02								124.00	131.40		16.96	36700
28B-3	03								184.00	191.40		25.38	54040
32B-1	01	50.80	30.99	29.21	17.81	42.20	7.00	6.00	67.40	75.30	58.55	9.49	25500
32B-2	02								126.00	133.90		18.74	45880
32B-3	03								184.00	191.90		28.04	68320
40B-1	01	63.50	38.10	39.37	22.89	52.90	8.60	7.90	82.60	92.60	72.29	15.53	36200
40B-2	02								154.00	164.00		30.72	64240
40B-3	03								227.00	237.00		45.97	96860
48B-1	01	76.20	45.72	48.26	29.24	63.80	11.60	9.60	99.10	109.10	91.21	24.45	57100
48B-2	02								190.00	200.00		48.54	101960
48B-3	03								281.00	291.00		72.67	152940

SELECTION OF THE SIZE OF COUPLINGS

1. Decide service factor for the unit for which the chain coupling is to be fitted by considering the hours of service, type of power unit etc. from the following table :-

Service Classification	Driven Equipment		Source Of Power		
	Kinds	Characteristics	Electric motor or Steam turbine	Steam or gasoline engine 4 or more cyl.	Diesel or Gas Engine
A	Centrifugal fans, blowers of pumps conveyor evenly loaded.	Even load - 8 hours/days service, Non-reversing-low torque starting.	1	1.5	2
B	Compressor, conveyor, pulsating load machines, kilns and drivers, speed reducers, Multi cylinder pumps, wood working machines, etc.	Uneven load - 8 hours/day service, Moderate shock or torsional loads, Non-reversing - This is the most common type of service.	1.5	2	2.5
C	Preses, crushers, impact loads, Oil well pumping equipments.	Heavy shock load - 8 hours/day service, high peak torsional loads. Reversing under load, Full load Starting	2	2.5	3

For 8 to 16 hrs/day srvices use next step service factor.
For 16 to 24 hrs/day srvices use service factor two step higher loading.
2. Multiply horsepower of driver unit by service factor. This is design horsepower.
3. Note the maximum rpm. at which the unit will run and its shaft diameter.
4. from H.P. rating table select the coupling size which is rated equal to or slightly greater than design H.P. required at the rpm. at which the coupling is to operate.
5. Also make sure that the diameter at the shaft is less than the maximum bore permissible on the coupling. If the coupling is not large enough to accommodate the shaft size, use the next coupling which can be bored to suit the shaft requirement.

COPLING NUMBER	MAX BORE	1	5	10	25	25	50	100	200	300	400	500	600	800	1000	1200	1500	1800	2000	2500	3000	3600	4000	4800	5200	6000
RE 0612	16	0.013	0.066	0.146	0.346	0.346	0.693	1.053	1.613	2.106	2.520	3.013	3.440	4.253	5.173	5.880	7.133	8.333	8.973	10.82	12.58	14.66	16.00	18.86	19.7	22.3
RE 0812	22	0.026	0.146	0.293	0.773	0.773	1.533	2.306	3.506	4.613	5.533	6.613	7.560	9.346	11.38	12.90	15.46	18.26	19.73	23.56	27.60	32.13	35.06	41.06		
RE 0816	32	0.053	0.280	0.546	1.373	1.373	2.746	4.120	6.253	8.226	9.880	11.80	13.46	16.66	20.40	23.06	28.00	32.53	35.06	42.53	49.33	57.33	62.53	73.20		
RE 1016	42	0.106	0.520	1.040	2.600	2.600	5.213	7.813	11.89	15.60	18.80	22.40	25.60	31.73	38.53	43.86	53.20	61.86	66.66	80.80	93.86	108.80				
RE 1018	48	0.133	0.666	1.320	3.306	3.306	6.600	9.906	15.06	19.86	23.73	28.40	32.53	40.13	48.80	55.46	66.733	78.40	84.53	102.40	18.13					
RE 1218	60	0.240	1.240	2.493	6.226	6.226	12.44	18.66	28.40	37.33	44.80	53.46	61.20	75.73	92.13	104.53	126.93	148.0	160.0	193.33						
RE 1222	76	0.333	1.666	3.346	8.413	8.413	16.66	25.06	38.13	50.26	60.40	72.13	82.53	102.0	124.13	140.0	170.66	198.66	214.66	260.0						
RE 1618	80	0.546	2.760	5.520	13.73	13.73	27.60	41.33	62.93	82.80	99.33	118.66	34.66	168.0	204.0	232.0	281.33	328.0	353.33							
RE 1622	95	0.789	3.946	7.906	19.73	19.73	39.46	59.33	89.60	118.66	141.33	169.33	94.66	240.0	292.0	332.0	402.6	469.33	505.33							
RE 2020	110	1.240	6.213	12.44	31.06	31.06	62.13	93.33	141.33	166.66	224.0	266.66	305.33	77.33	460.0	522.66	634.66	738.66								
RE 2418	119	1.866	9.360	18.66	46.80	46.80	93.60	140.0	213.33	280.0	336.0	402.6	460.0	568.0	692.0	786.86	954.66									
RE 2422	150	2.413	12.09	24.13	60.40	60.40	120.93	181.33	274.66	362.66	434.66	520.0	594.66	34.66	894.66	1016.0										
RE 3218	160	4.040	4.040	40.40	101.06	101.06	201.33	302.66	460.0	606.66	728.0	869.33	994.66	1229.3	1496.0											

LUBRICATION

Couplings operating without covers under fairly clean conditions will give satisfactory service provided they are periodically (weekly) brushed thoroughly with ball bearing grease of medium consistency. Couplings operating with covers should be kept filled with a good quality ball bearing grease of soft or medium consistency.

ROLLER CHAIN FLEXIBLE COUPLINGS

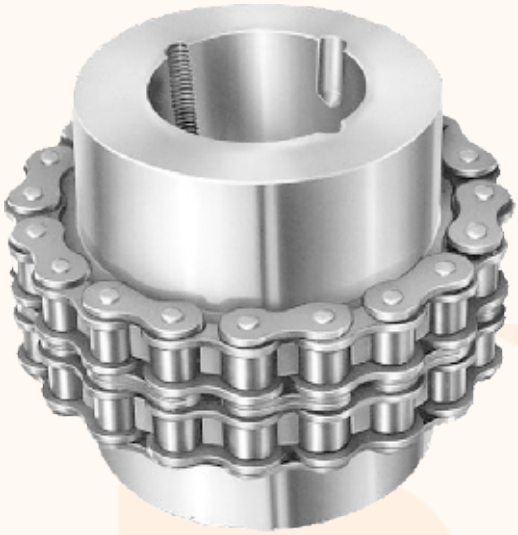

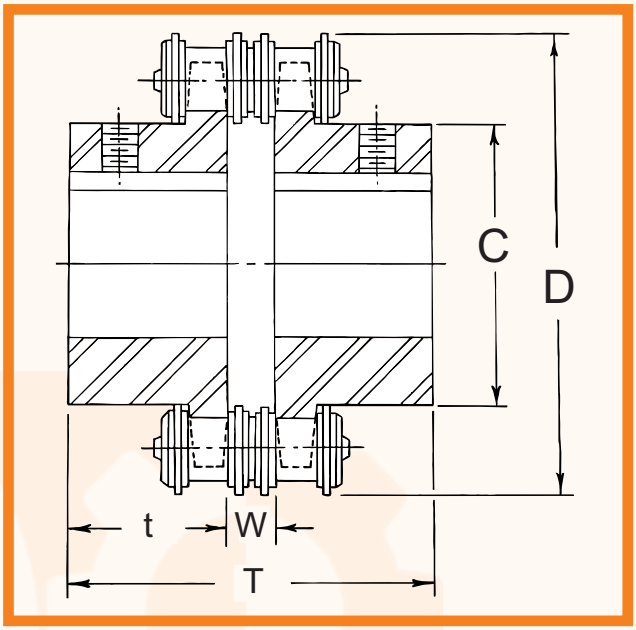

COUPLING NUMBER	BORE		T	t	W	C	D	Wt.Kg.
	MIN	MAX						
RE 0612	10	16	65	30	5	27	45	0.3
RE 0812	10	22	79	36	7	35	60	0.8
RE 0816	12	32	79	36	7	50	77	1.6
RE 1016	16	42	96	44	8	61	96	2.6
RE 1018	16	48	98	45	8	71	106	3.5
RE 1218	20	60	121	56	9	88	126	6.5
RE 1222	20	76	121	56	9	110	150	10
RE 1618	25	80	150	67	16	115	170	14.5

COUPLING NUMBER	BORE		T	t	W	C	D	Wt.Kg.
	MIN	MAX						
RE 1622	25	95	150	67	16	140	201	20
RE 2020	40	110	200	91	18	157	231	33.5
RE 2418	50	119	260	118	24	169	254	51
RE 2422	50	150	260	118	24	208	301	76
RE 3218	50	160	360	165	30	220	341	121
RE 3222	50	199	360	165	30	280	410	210
RE 4018	60	205	517	240	37	295	425	320
RE 4022	60	260	517	240	37	373	507	470

Table of Coupling Service Factors

(Maximum)

Type of Applications	Factor	Type of Applications	Factor
Agitator	2.0	**Machine Tools :**	.
Blower	2.0	Main drive	2.0
Compressor, centrifugal/rotary	2.5	Auxiliary drive	1.5
		Traverse drive	1.5
Conveyor :		Bending Roll, Notching Press, Punch	
Apron, Belt, Chain	1.5	Press, Planer, Plate - Recersing	3.0
		Mixers :	
Bucket	2.0	Concrete & Muller	2.5
Live Roll, Shaker	3.0	***Paper Mill**	1 to 5
		Fans :	
		Cooling Tower & Mine	2.5
		Industrial	2.0
Cranes & Hoist :			
Class 1 & 2 : Hoists	3.0	**Pumps :**	1.25
Brodge, Travel or Trolley	2.5	Centrifugal, even load	1.75
Class 3 & 4 : Hoists	4.0	-do- under	2.0
Bridge, Travel or Trolley	3.0	Gear, Rotary or vane	3.0
Crushers, Stones & Ores	4.0	Reciprocation, 1 or 2 Cyl.	2.5
Dynamometer	2.0	-do- 3 or more Cyl.	
Elevators, Bucket	2.5	**Rubber Industry :**	3.0
Escalators	2.0	Mixing Mill, Refiner	2.5
Extruder, Plastics / Rubber	2.0	Worming Mill	1.5
Feeders :		Others	to
Apron, Blet, Screw - Horizontal	1.0		3.0
		Screens :	
Generators :		Rotary, Coal or Sand	2.0
Even load	1.7	Vibrating	3.5
Hoist or Rly. Service	2.5	***Steel Mills / Rolling Mills**	2 to 6
Welder Load	2.5	**Stoker**	1.5
Hammer Mill, Cement or Mines	2.5	**Turbo-Generator**	1.25
Haulage, Mining	3.0	**Winch, Manoeuvring :**	
Kiln, Rotary for Cement, Mining	3.0	Dredge, Marine	2.0
Line Shaft	2.0	**Wood Workign Machinery**	1.5

* Drives in Paper Mills and Steel Mills are of so diverse nature that each appliction need to be considered separately. Hence, full details of drive requirement must be referred to REAL ENTERPRISE recommendation.

FELXIBLE GEAR COUPLING

Under the misalignment condition of two shafts of the equipment, the teeth contact in case of straight cut hub will be as minimum as shown in the figure no.1 Under heavy loads the ends of the hub teeth will get damaged resulting in the excessive play between hub and sleeve, and there-fore, the reduction in life of coupling.

REAL ENTERPRISE **Triple Crowned Teeth**

The triple crowned teeth hub is manufactured on a fully automatic hobbing machine with built in crowning attachment which is controlled by hydraulic and electronic systems. Under the misalignment condition of two shafts on the equipment, due to the curvature of teeth flank the contact area is much more and therefore, there is increase in life of coupling.

MISALIGNMENT DETAIL : In Case of straight tooth gear coupling the maximum allowable angular misalignment (a) is 1. ½ deg. And in case of **REAL ENTERPRISE** Triple Crowned Tooth Gear Coupling the misalignment is **7.1/2 degree**

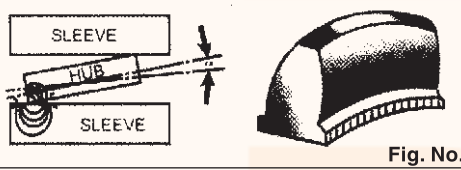

Fig. No. 1

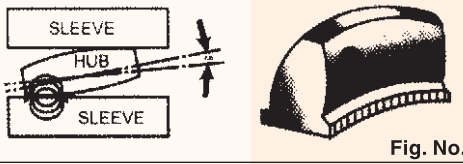

Fig. No. 2

This cover Construction for SFG 111 words

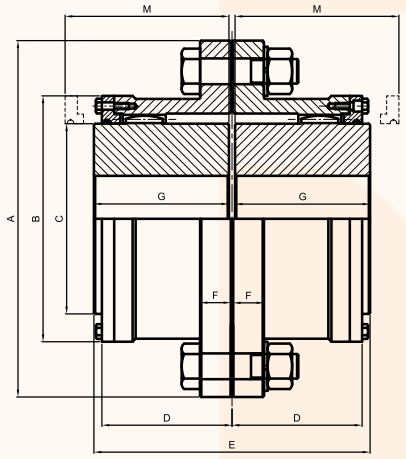

SERVICE FACTORS **PRIME MOVER**

Type of Load	Electric Motor or Steam Turbine	Gasoline or Diesel Engine 4 or More cyl.	Gasoline or Diesel Engine More than 6 or cyl.
LIGHT Uniform or stedy Load never exceeding horse rating, infrequent starting; Agitators, Blowers, Can Filling Machines, Conveyors, Fans, Generators, Pumps, Steering Gear, Stokers.	1.0	1.5	2.0
MODERATE Heavy inertia, moderate shock, frequent starting; peak loads do not exceed 125 per cent average horsepower, uneven load; Conveyors, Feeders, Welding, Laundry Washers, Mixers, Paper Mills; Printing Presses, Screens, Taxtile Industry, Car Pullers.	1.5	2.0	2.5
HEAVY Heavy shock conditions or frequent reversing peak loads do not 150 per cent average horse power. Uneven load, Cranes & Hoists, Crushers, Dredges, Elevators, Hammer, Mills, Limber Industry, Machine Tools. Metel Millis, Oil Industry, Rubber Industry, Windlass.	2.0	2.5	3.0

FULL GEAR COUPLINGS

Size DFC	Max Bore mm.	Pilot Bore mm.	Load Torque kg. M.	capacity H. P. Per 100 RPM	Max RPM	Wt. with Solid hubs Kg.	GD2	DIMENSIONS IN MM								
								A	B	C	D	E	F	G	H	M
100	35	10	50	7	8000	4.2	0.03	120	75	50	39.5	93	15	45	1.5	45
101	50	20	100	14	6300	10	0.14	170	110	65	49	115	17	55	2.5	65
102	60	30	250	35	5000	15	0.20	185	125	85	62	145	17	70	2.5	80
103	75	40	450	63	4000	26	0.48	220	150	105	78	175	20	85	2.5	105
104	90	50	850	119	3350	40	0.95	250	175	130	96	215	20	105	2.5	125
105	110	60	1300	182	2800	62	1.90	290	200	155	106	230	25	110	5.0	140
106	125	75	2000	280	2500	85	3.00	320	230	175	117	260	25	125	5.0	155
107	140	90	3500	490	2100	120	5.25	350	260	205	134	290	25	140	5.0	175
108	160	105	4500	630	1900	180	8.50	380	290	230	147	320	25	155	5.0	190
109	180	125	5600	784	1700	210	15.00	430	330	250	156	340	25	165	5.0	205
110	220	140	8200	1148	1400	290	30.50	490	390	310	171	370	25	180	5.0	220
111	260	160	11000	1536	1250	550	58	545	445	350	192	410	30	200	5.0	240
112	300	180	14700	2053	1120	710	88	590	490	400	231	490	30	240	5.0	280
113	330	200	20000	2793	1000	980	138	680	555	440	242	535	35	260	7.5	310
114	370	220	28600	3994	900	1320	291	730	610	500	266	575	35	280	7.5	330
115	410	250	34750	4852	800	1700	353	780	660	540	305	655	35	320	7.5	370
116	455	300	60000	8378	710	2550	680	900	755	625	335	720	45	350	10.0	425
117	520	375	83550	11917	630	3620	1235	1000	855	720	386	820	45	400	10.0	460
118	610	450	113000	15778	560	4860	1965	1100	950	810	430	920	55	450	10.0	510
119	710	520	149000	20805	500	6380	3012	1250	1050	910	446	1000	55	485	15.0	560

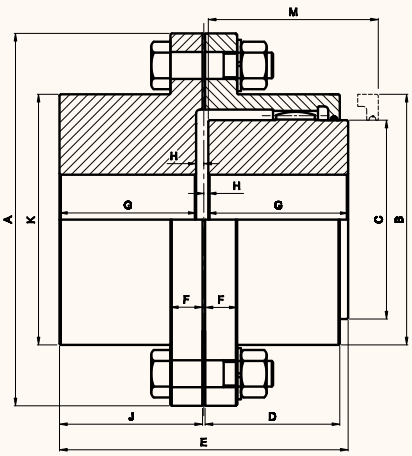

HALF GEAR HALF RIGID COUPLINGS

Size DHG	Max Bore In. mm GEAR	Max Bore In. mm RIGID	Pilot mm	Load Capacity Bore kg. M	Load Capacity Torque 100 RPM	Max H.P. Per	Wt.with RPM kg.	GD2 Solidhubs Kg. M	DIMENSIONS IN MM										
									A	B	C	D	E	F	G	H	J	K	M
100	35	50	**10**	50	7	8000	4.2	.03	120	75	50	39.5	93	15	45	1.5	46.5	70	55
101	50	60	**20**	100	14	6300	110	.14	170	110	65	49	115	17	55	2.5	57.5	85	65
102	60	75	**30**	250	35	5000	15	.20	185	125	85	62	145	17	70	2.5	72.5	110	80
103	75	90	**40**	450	63	4000	26	.48	220	150	105	78	175	20	85	2.5	87.5	130	105
104	90	110	**50**	850	119	3350	40	.95	250	175	130	96	215	20	105	2.5	107.5	160	125
105	110	130	**60**	1300	182	2800	62	1.90	290	200	155	106	230	25	110	5.0	115	185	140
106	125	150	**75**	2000	280	2500	85	3.00	320	230	175	117	260	25	125	5.0	130	215	155
107	140	170	**90**	3500	490	2100	120	5.25	350	260	205	134	290	25	140	5.0	145	240	175
108	160	200	**115**	4500	630	1900	180	8.50	380	290	230	147	320	25	155	5.0	160	285	190
109	180	220	**125**	5600	784	1700	210	15.00	430	330	250	156	340	25	165	5.0	170	315	205
110	220	260	**140**	8200	1148	1400	290	30.50	490	290	310	170	370	25	180	5.0	185	370	220

FLEXIBLE BREAK COUPLING

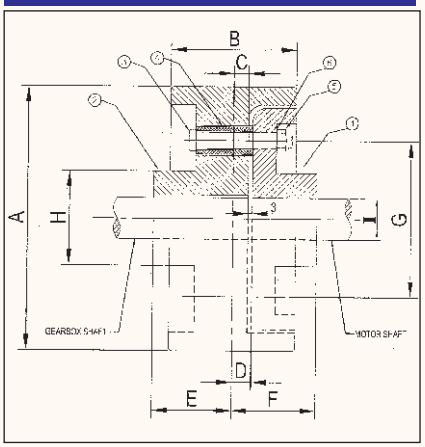

COUPLING SIZE	ØA	B	C	D	E	F	ØG	ØH	FINISH BORE (I)		WEIGHT KG	TORQUE	HP/ RPM	CD2 KGM2
									Min.	Max.				
REFBC 100	100	65	3	6	32	32	64	45	16	25	4	15	0.016	0.015
REFBC 150	150	80	3	6	42	42	92	65	16	30	10	36	0.028	0.09
REFBC 160	160	90	3	6	42	42	96	70	16	30	12	36	0.030	0.13
REFBC 180	180	95	3	6	47	47	119	75	16	40	16	45	0.050	0.32
REFBC 200	200	102	6	10	57	73	127	90	16	55	18	63	0.050	0.32
REFBC 250	250	127	6	10	82	98	142	100	25	55	28	90	0.125	1.0
REFBC 300	300	152	6	10	89	105	197	127	25	75	61	250	0.350	2.5
REFBC 315	315	160	6	10	95	95	220	130	25	80	65	300	0.420	2.85
REFBC 400	400	180	3	6	147	156	250	150	25	100	130	360	0.500	9.94
REFBC 450	450	184	0	3	133	137	267	155	45	110	172	450	0.630	15.4
REFBC 500	500	210	6	9	144	159	290	200	45	125	250	950	1.380	27.5

RIGID COUPLING

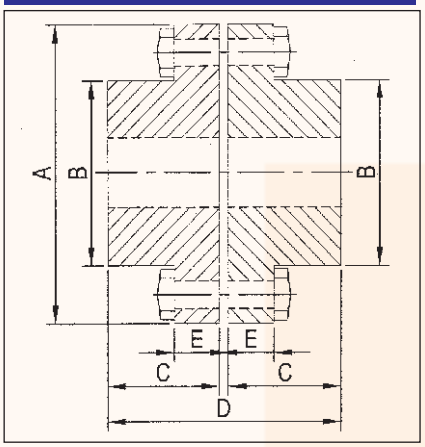

COUPLING SIZE	FINISH BORE		ØA	ØB	C	ØD	E	WEIGHT kg.	MAX RPM
	Min.	Max.							
RERC 100	10	50	120	70	46.5	93	15	7	8000
RERC 101	20	60	170	85	57.5	115	17	14	6300
RERC 102	30	75	185	110	72.5	145	17	21	5000
RERC 103	40	90	220	130	87.5	175	20	35	4000
RERC 104	50	110	250	160	107.5	215	20	52	3350
RERC 105	60	130	200	185	115	230	25	75	2800
RERC 106	75	150	320	215	130	260	28	108	2800
RERC 107	90	170	350	240	145	290	28	145	2100
RERC 108	105	200	380	285	160	320	25	175	1900
RERC 109	125	220	430	315	170	340	25	268	1700
RERC 110	140	260	490	370	185	370	25	388	1400

BREAK DRUM WITH FLEXIBLE COUPLING

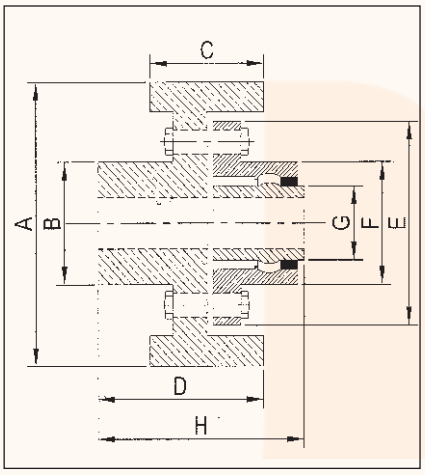

COUPLING SIZE	FINISH BORE		ØA	ØB	C	ØD	E	F	G	H	WEIGHT KG	TORQUE	MAX RPM
	Min.	Max.											
REBDFC 150	10	30	150	65	80	95	120	75	50	110	11.5	50	8000
REBDFC 160	10	35	160	70	90	110	120	75	50	120	13.7	50	8000
REBDFC 200	20	45	200	90	100	120	170	110	65	134	23.5	100	6300
REBDFC 250	20	45	250	105	120	130	170	110	65	134	34.2	100	6300
REBDFC 250	30	55	250	105	120	130	185	125	85	149	41	250	5000
REBDFC 300	40	70	300	130	150	170	220	150	105	192	64.5	450	4000
REBDFC 300	50	85	300	130	150	170	250	175	130	212	72	850	3350
REBDFC 375	50	85	375	135	165	185	250	175	130	218	140	850	3350
REBDFC 400	50	85	400	150	180	210	250	175	130	225	152	850	3350
REBDFC 400	60	105	400	150	180	210	290	200	155	230	160	1300	2800
REBDFC 450	60	105	450	170	200	220	290	200	155	235	178	1300	2800
REBDFC 500	75	120	500	210	225	340	320	230	175	275	225	2000	2500

BREAK DRUM GRARED COUPLING

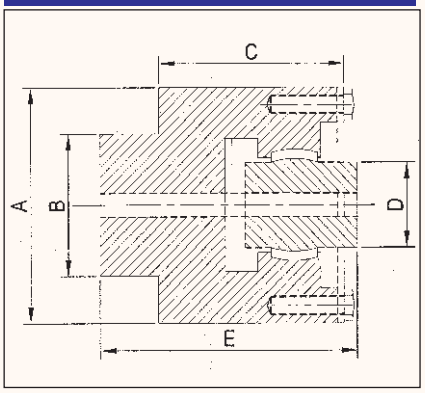

COUPLING SIZE	FINISH BORE		A	B	C	D	E	WEIGHT kg.	TORQUE	MAX RPM
	MIN.	MAX.								
REBDGC 4”	12	45	101.6	80	70	65	103	10	100	8000
REBDGC 5”½	15	50	139.7	82	90	70	130	19	100	6300
REBDGC 6”	15	50	152.4	82	90	70	130	22	250	6300
REBDGC 7”	20	55	177.8	90	100	85	140	33	450	5000
REBDGC 8”	20	70	203.2	120	102	120	143	47	850	4000
REBDGC 10”	20	80	254	130	120	125	160	82	2000	3350

TYPE ED

Multi Crowned Toothed Couplings For Shaft Connections Type ED

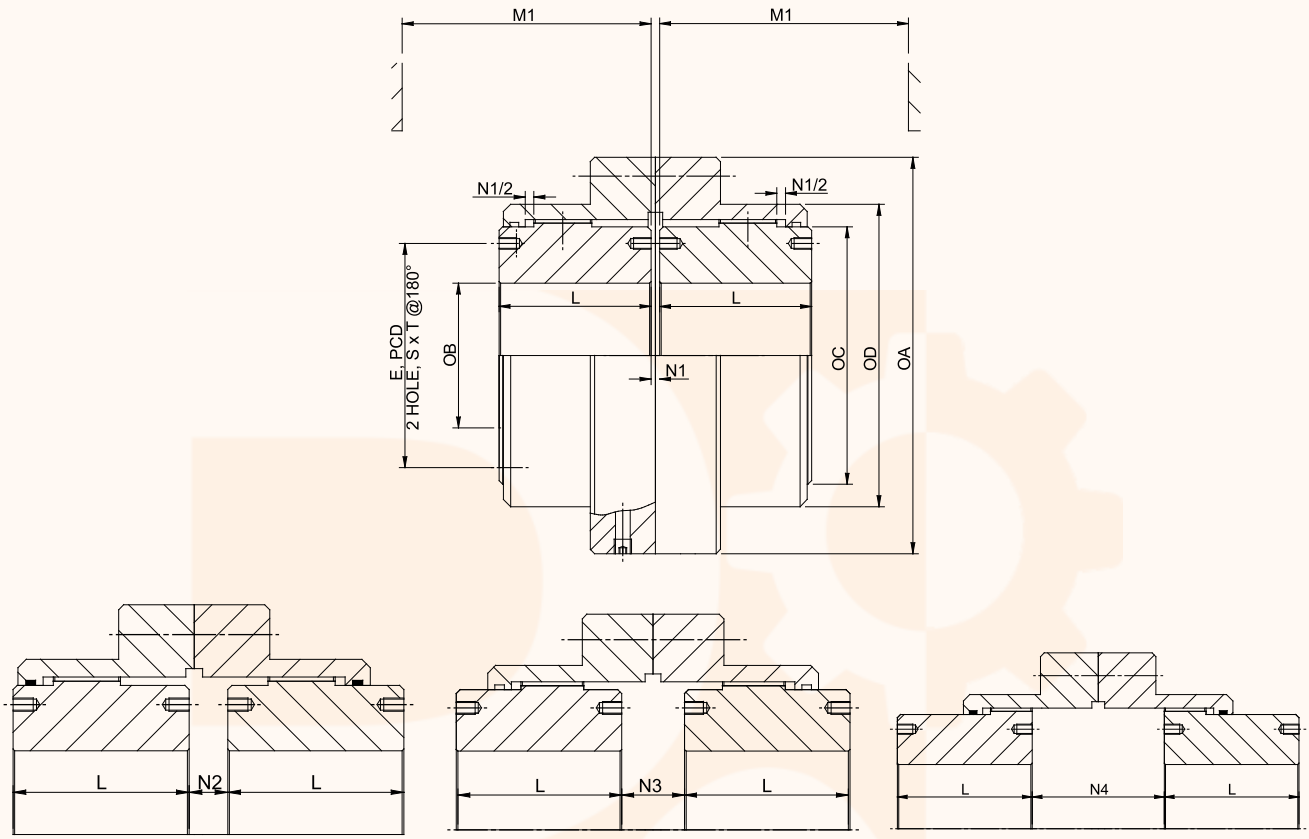

Size TkN Continuous	Tk max shock	PkN / n conti.	Diameter						Length						Tapping		Misalignment		Weight	Moments of Inertia	Maximum ADM Speed
			A	B			C	D	L	M1	N1	N2	N3	N4	E	SxT					
				pilot	min.	Maxi															
daNm	daNm	kW/rpm	mm						mm						mm		Degree	± mm	kg	(kgm2)	1/min
RE130	260	0.136	111	10	15	45	67	80	43	74	3	12	21	43	-	-	2x0.75	0.35	4	0.005	7000
RE280	560	0.293	141	15	20	60	87	103.5	50	84	3	9	15	45	-	-	2x0.75	0.4	7	0.015	6200
RE500	1000	0.524	171	25	30	75	106	129.5	62	105	3	17	31	63	-	-	2x0.75	0.5	14	0.039	5650
RE1000	2000	1.047	210	30	35	95	130	156	76	123	5	17	29	74	-	-	2x0.75	0.6	25	0.101	5100
RE1600	3200	1.675	234	35	40	110	151	181	90	148	5	19	33	86	130	M8x12	2x0.75	0.7	37	0.188	4700
RE2200	4400	2.304	274	50	55	130	178	209	105	172	6	23	40	103	155	M8x12	2x0.75	0.9	60	0.431	4350
RE3200	6400	3.351	312	60	65	155	213	247	120	193	6	24	42	116	185	M10x15	2x0.75	1	90	0.845	4000
RE4500	9000	4.712	337	75	80	175	235	273	135	215	8	29	50	130	205	M12x18	2x0.75	1.1	118	1.322	3800
RE6200	12400	6.492	380	85	90	195	263	307	150	241	8	32	56	144	226	M16x24	2x0.75	1.2	169	2.45	3600
RE8400	16800	8.796	405	95	100	215	286	338	175	279	8	39	70	170	250	M16x24	2x0.75	1.4	224	3.72	3450
RE11500	23000	12.042	444	115	120	240	316	368	190	304	8	46	84	188	276	M16x24	2x0.75	1.5	277	5.39	3300
RE17400	34800	18.221	506	145	150	275	372	426	220	339	10	42	74	204	330	M20x30	2x0.75	1.7	414	10.88	3050

1 SPACE REQUIRED TO CHANGE THE SEAL
2 KEYWAYS ACCORDING TO DIN:6885PART-1
3 MAXIMUM ANGULAR MISALIGNMENT PER COUPLING HALF 0.75
4 WEIGHT & MOMENT OF INERTIA BASED ON PILOT BORE CONDITION.
5 CONTINUOUS TORQUE RATING SUBJECT TO ACCURATE ALIGNMENT OF CONNECTING SHAFTS.
6 FOR A HIGHER SIZE REQUIREMENT, PLEASE CONTACT APPLICATION ENGINEERING.

In accordance with our established policy to constantly improve our products, these specifications are subject to change without notice

TYRE COUPLINGS - DIMENSIONS

B TYPE

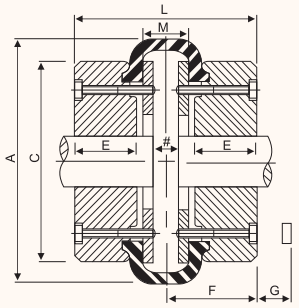

F - 40 & 45

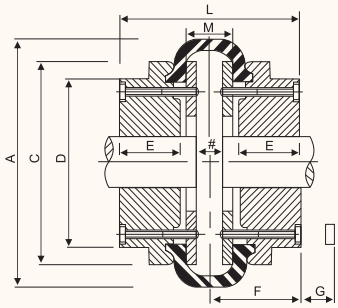

F - 50

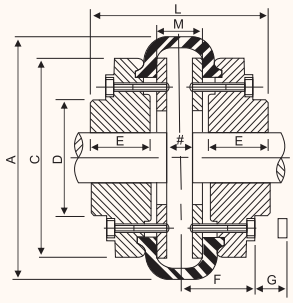

F - 60

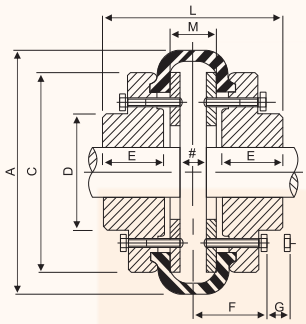

F - 70 TO 120

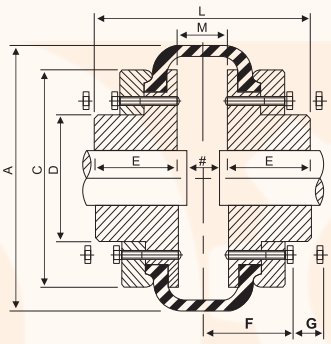

F - 140 TO 250

TABLE 2 : DIMENSIONS "F&H" AND "B" TYPE COUPLINGS

Size	TYPE F & H								TYPE B								A	C	‡ G	† M	No. of screws per flange
	Bush No.	Max Bore	L	D	E	F	ξ J	* Approx Weight Kg	Max Bore	Min Bore	L	D	E	F	Set Screw on key	* Approx Weight Kg					
F40	1008	25	67	-	22	33.5	29	1.4	30	11.00	67	-	22	33.5	M5	2.0	104.0	82	43	23	4
F45	1108	28	67	-	22	33.5	29	3.0	32	11.00	73	-	25	36.5	M5	2.2	120.0	94	43	23	4
F50	1210	32	78	79.0	25	39.0	38	3.1	38	16.00	92	79	32	46.0	M5	4.0	133.5	100	43	28	4
F60	1610	42	86	103.0	25	43.0	38	5.2	48	16.00	112	73	38	43.0	M6	5.0	165.0	125	43	36	5
F70	1610	42	92	76.0	25	50.5	38	7.4	55	19.05	132	82	45	50.5	M6	8.0	197.0	144	10	42	5
F80	2012	50	111	95.0	32	53.0	47	9.2	65	25.40	149	95	51	53.0	M10	12.0	211.0	167	10	47	6
F85	2012	50	112	103.0	32	53.5	47	12.5	70	31.75	154	103	53	53.5	M12	14.0	222.0	179	13	48	6
F90	2517	60	140	110.0	45	59.5	50	15.0	76	31.75	164	110	57	59.5	M12	15.0	235.0	188	13	50	6
F100	2517	60	148	124.0	45	61.5	50	20.0	85	31.75	178	124	60	61.5	M12	21.0	254.0	216	13	58	6
F110	2517	60	140	134.0	45	63.5	50	26.5	90	31.75	180	134	65	63.5	M12	28.0	279.0	233	14	50	6
F120	3020	75	157	152.0	51	70.0	68	35.5	102	38.10	207	152	76	70.0	M12	41.0	314.0	264	14	55	6
F140	3535	90	204	194.5	89	76.0	89	67.2	120	75.00	204	195	89	76.0	M20	61.0	359.0	313	14	26	8
F160	4040	100	220	216.0	102	78.0	110	91.0	140	75.00	220	216	102	78.0	M20	86.0	402.0	345	19	16	8
F180	4545	110	258	266.0	114	94.0	126	146.0	150	75.00	258	266	114	94.0	M20	141.0	470.0	398	19	30	10
F200	4545	110	278	266.0	114	103.0	126	182.0	150	75.00	276	266	114	103.0	M20	179.0	508.0	429	19	48	12
F220	5050	125	312	267.0	127	118.0	140	320.0	160	90.00	312	267	127	118.0	M20	312.0	562.0	474	20	56	12
F250	-	-	-	-	-	-	-	-	190	100.00	360	290	150	125.0	M20	500.0	628.0	532	25	60	12

Dimensions are in millimetres

* Weights given are for min. bore complete coupling.

† M is the distance between flanges.

\# Shaft ends, although normally located 'M' apart - can project beyond the flanges as shown. In this event, allow sufficient space between shaft ends for the float and misalignment.

‡ G is the amount by which clamping screws need to be withdrawn to release tyre.

ξ J is the wrench clearance to allow for tightening and loosening the bush on the shaft. The use of shortened wrench will allow this dimension to be reduced.

STANDARD COUPLINGS - TYPES Y & Z

(WITH VERTICALLY SPLIT COVERS)

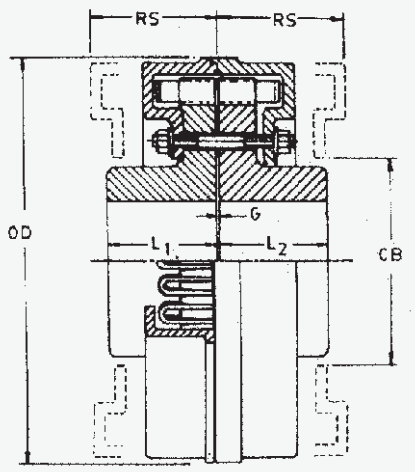

TYPE - Y
(NO 120 TO 123 COLUMN 1)

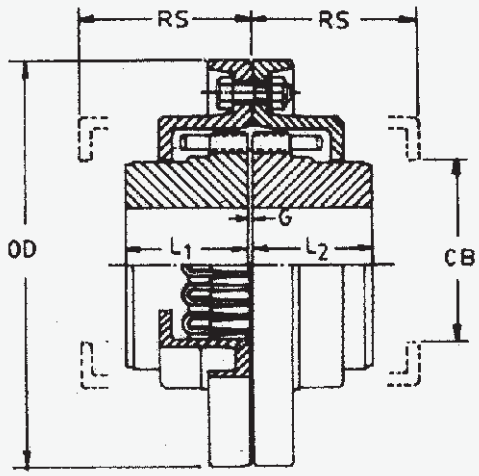

TYPE - Z
(NO 101 TO 117 COLUMN 1)

RESILIENT COUPLING

Coupling No.	Rating HP/RPM	Clear DIA OD (MM)	Boss Length L1 (MM)	Boss Length L2 (MM)	Removal Space RS (MM)	Gap G (MM)	Cover Bore CB (MM)	Safe Speed RPM	Stock Rough Bore (MM)	Max. Bore (MM)	Approx. Weight KGS
101	.006	105.0	38.0	38.0	52	.85	44.52	5650	10	29	3
102	.010	120.5	38.0	38.0	52	.85	58.80	4750	12	38	4
103	.020	144.5	44.5	44.5	59	.85	62.00	4450	16	41	5
104	.030	171.5	51.0	51.0	59	.85	87.45	3400	16	57	9
106	.045	190.5	51.0	51.0	79	.85	84.25	3200	16	54	11
107	.065	197.0	57.0	57.0	79	.85	96.95	2950	16	64	15
108	.095	222.0	63.5	63.5	79	.85	119.20	2500	25	78	20
109	.125	254.0	70.0	70.0	80	.85	143.00	2150	25	92	27
110	.185	276.0	89.0	89.0	80	.85	165.20	1900	25	108	43
111	.355	295.0	102.0	102.0	128	1.60	155.70	1800	38	102	54
113	.455	324.0	101.5	101.5	147	1.60	187.46	1650	50	123	63
114	.655	336.5	101.5	101.5	147	1.60	184.28	1550	50	121	72
115	.905	375.0	114.0	114.0	147	1.60	222.38	1350	50	146	104
117	1.255	425.5	127.0	127.0	147	1.60	254.00	1200	50	167	149
120	1.755	432.0	140.0	140.0	179	3.20	239.50	1200	75	157	175
121	2.405	432.0	140.0	140.0	179	3.20	239.50	1200	75	157	180
122	2.755	432.0	152.5	152.5	179	3.20	266.70	1100	85	173	207
123	3.505	432.0	152.5	152.5	179	3.20	266.70	1100	85	173	216

Fluid Couplings

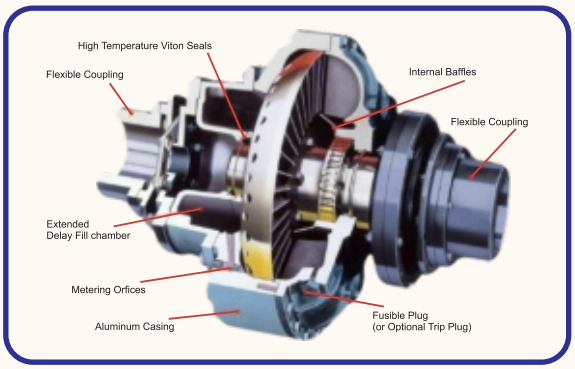

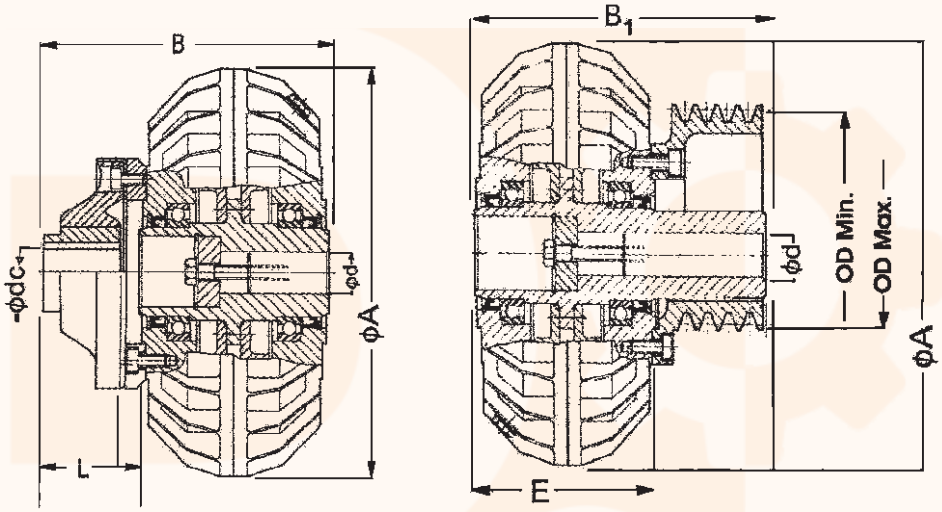

Model	A	B	L	Ødc max.	B_1	E	ØD min.	ØD max.	Ød max.
C-01	210	116	35	26	73	---	100	---	35
C-02	210	151	45	32	134	92	70	140	38
C-03	245	177	50	38	168	112	90	180	42
C-04	277	203	60	48	191	125	90	180	42
C-05	322	225	65	60	224	138	110	220	55
C-06	373	255	70	65	263	160	125	250	60
C-07	418	282	80	70	318	176	140	250	65
C-08	473	310	90	80	355	194	180	280	75
C-085	490	340	110	90	390	240	200	320	80
C-09	560	400	130	100	460	280	250	400	90
C-10	640	440	150	110	---	---	---	---	100
C-105	710	480	180	120	---	---	---	---	110
C-11	800	520	210	150	---	---	---	---	120

CAPACITY HP RPM	MODEL												
	C-01	C-02	C-03	C-04	C-05	C-06	C-07	C-08	C-085	C-09	C-10	C-105	C-11
960	--	0.3	1.5	2.5	5.0	10.0	20.0	35.0	50.0	75.0	120.0	200.0	300.0
1440	1.0	2.0	3.0	7.5	15.0	25.0	50.0	75.0	130.0	200.0	300.0	500.0	750.0
2880	5.0	10.0	15.0	25.0	40.0	60.0	100.0	-	-	-	-	-	-

When You Need Made-to-order...

REAL ENTERPRISE specialty products are designed to meet your needs.

We start with high-quality material crafted to your specification. We add strength and protection with our final treatments, which may include heat or special coatings. Add we ship as quickly as possible. The result is a long-lasting customized sprocket that keeps your lines moving

At Real Enterprise, made-to-order means made right and made fast.

Call 079 - 2274 9300 for a made - to - order sprocket quote today.

WORM & WORM WHEEL
RANGE:
Up to 30 Module & 1” D. P.
in Diameter Up to 18' Ft. &
Face Width up to 500 mm in the
Materials of M. S., C.I., Cast Steel,
E. N. Materials

CONVEYOR SPROCKET WHEEL
RANGE:
From 3” Pitch to 12” Pitch for
All Types of Carriers & as per
customers Specifications in all Materials.
(Teeth Duly Machine Cut)

SPIRAL BEVAL
RANGE:
Up to 12 Module in
Diameter Up to 600 mm &
Face Width up to 125 mm in the
Materials of M. S., C.I., Cast Steel,
E. N. Materials

SPUR GEAR
RANGE:
Up to 30 Module & 1' D.P. in Diameter
Up to 18' Ft. & face width up to 600mm
in the materials of M. S., C.I., Cast Steel,
E. N. Materials

PINION
RANGE:
Up to 30 Model & 0.75” D. E.
& Face width up to 600 mm in
the materials of C. S., EN &
Forged Steel

REAL ENTERPRISE

Reg. Off. & Works :
9, Patel Estate, Opp. Satnam Estate,
Nagarvel Hanuman Road, Rakhial,
Ahmedabad - 380 023. Gujarat (INDIA)

Tele Fax : 079-22749300
Mobile : +91 93270 09351, +91 7779092774
E-mail : realenterprise.in@gmail.com

Web : www.real-enterprise.in